TEREX | DEMAG

AC 500-2 | All Terrain Crane 600 t Lifting Capacity

AC 500-2

ALL TERRAIN CRANE

HIGHLIGHTS

AC 500-2

- Enhanced Demag ovaloid boom design ensures excellent lifting capacities
- Exceptional capacity enhancements due to new Sideways Superlift
- The shortest 8-axle crane with a carrier length of just 56.1 ft
- Star-type outriggers giving enhanced stability
- Short rigging time and optimal transport weights for all configurations
- Innovative crane control provides high operating comfort

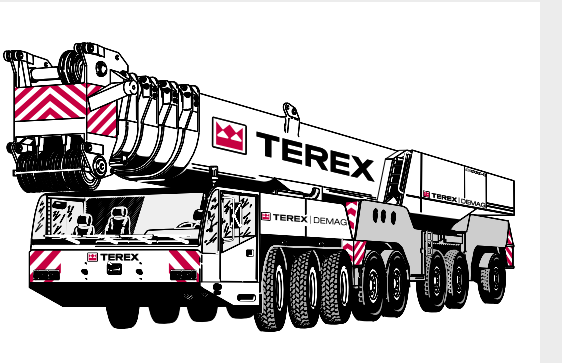

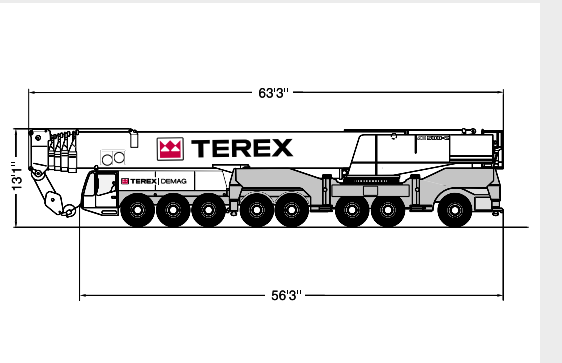

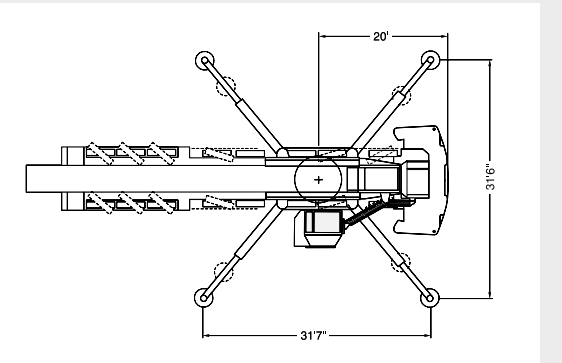

CONTENTS

	Page:	
Specifications		1
Dimensions	4	
Specifications	6	
Main boom		2
Working ranges with / without SSL	7	
Lifting capacities	8, 12	
Lifting capacities with SSL	10, 13	
Main boom extension		3
Working ranges with / without SSL	15	
Lifting capacities	16	
Lifting capacities with SSL 0°	17	
Lifting capacities with SSL 30°	18	
Fixed fly jib		4
Working ranges with / without SSL	19	
Lifting capacities	20, 22, 24	
Lifting capacities with SSL	21, 23	
Luffing fly jib		5
Working ranges with / without SSL	25	
Lifting capacities	26-30, 32, 34, 36, 38	
Lifting capacities with SSL	31, 33, 35, 37, 39	
Technical description		6
Carrier · Superstructure · Optional equipment	40	
Overview		7
of standard duty charts	42	

DIMENSIONS

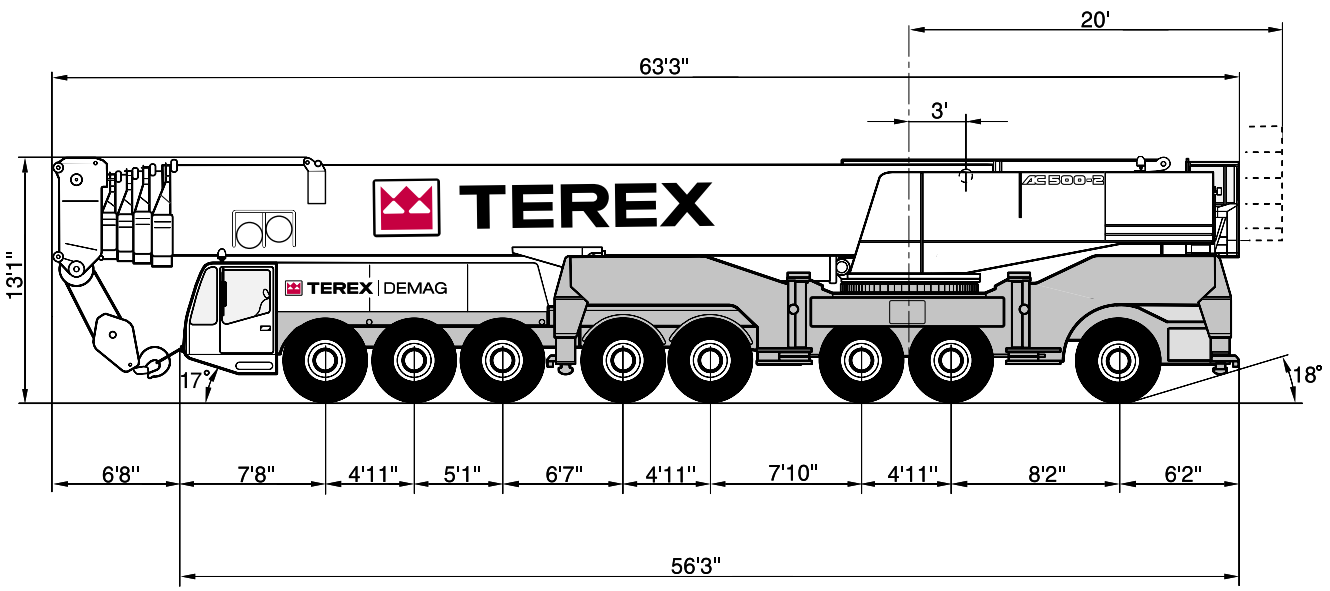
20'
63'3"
3'
13'1"
TEREX
TEREX | DEMAG
AC 500-2
17°
18°
6'8"
7'8"
4'11"
5'1"
6'7"
4'11"
7'10"
4'11"
8'2"
6'2"
56'3"

DIMENSIONS

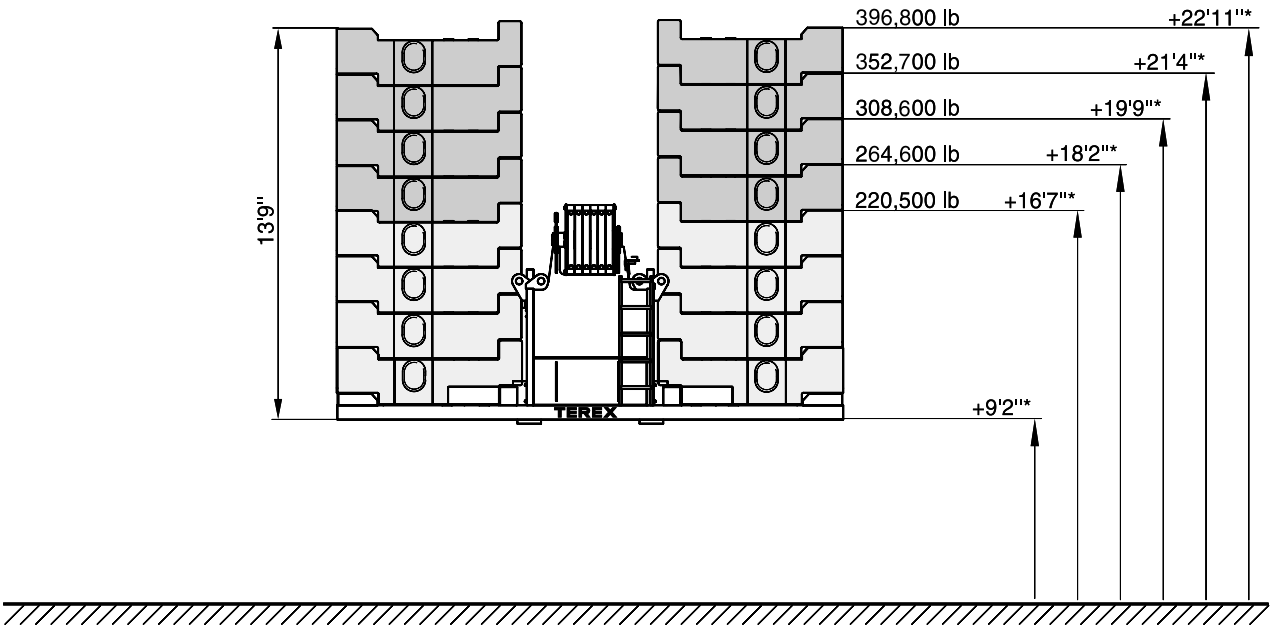

* Tail swing above ground

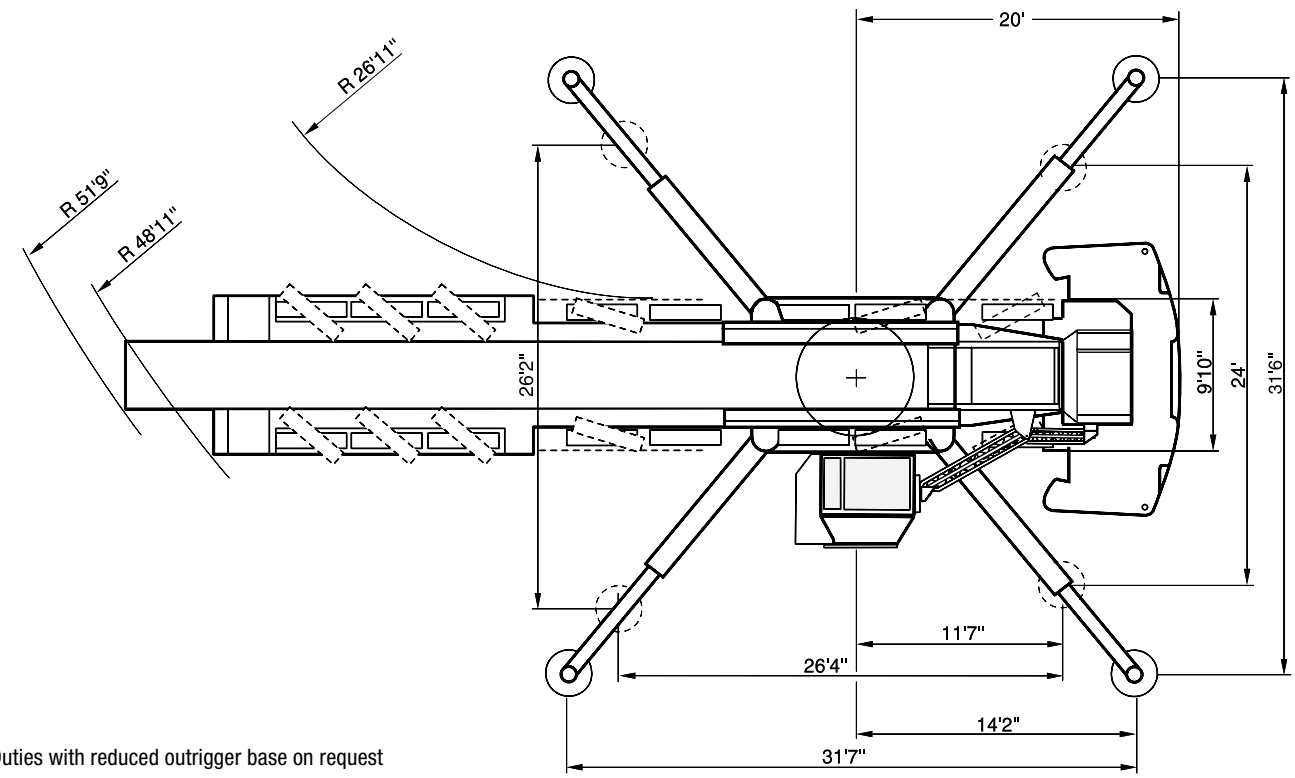

Duties with reduced outrigger base on request

SPECIFICATIONS

AXLE LOADS

Crane with main boom, outriggers and hook block

Axles	8 x 26,500 lb
Total weight	212,000 lb

WORKING SPEEDS (INFINITELY VARIABLE)

Mechanisms	Normal speed	Max. permissible line pull	Rope length
Hoist I	max. 423.7 ft / min	28,100 lb	1,969 ft
Hoist II	max. 505.3 ft / min	28,100 lb	2,362 ft
Slewing			max. 0.8 1/min.
Telescoping speed			48.2 – 183.7 ft: ~ 420 sec.
Boom elevation			– 0.5° – +83°: 85 sec.

CARRIER PERFORMANCE

Travel speed	0 . . 40 mph

HOOK BLOCK / HEAVY-LIFT ATTACHMENT

Type	Possible load	Number of sheaves	Weight	„D“	Number of lines	Heavy-lift attachment
320	491,500 lb	11	7,100 lb	14.8 ft	20	2 add'l. sheaves
250	469,200 lb	9	5,700 lb	14.8 ft	19	2 add'l. sheaves
200	390,300 lb	7	5,100 lb	9.8 ft	15	
160	291,900 lb	5	4,200 lb	9.8 ft	11	
100	189,400 lb	3	4,000 lb	9.8 ft	7	
40	82,900 lb	1	1,700 lb	8.9 ft	3	
12.5	27,800 lb	Single line hook	1,100 lb	6.6 ft	1	

WORKING RANGES MAIN BOOM WITH / WITHOUT SSL

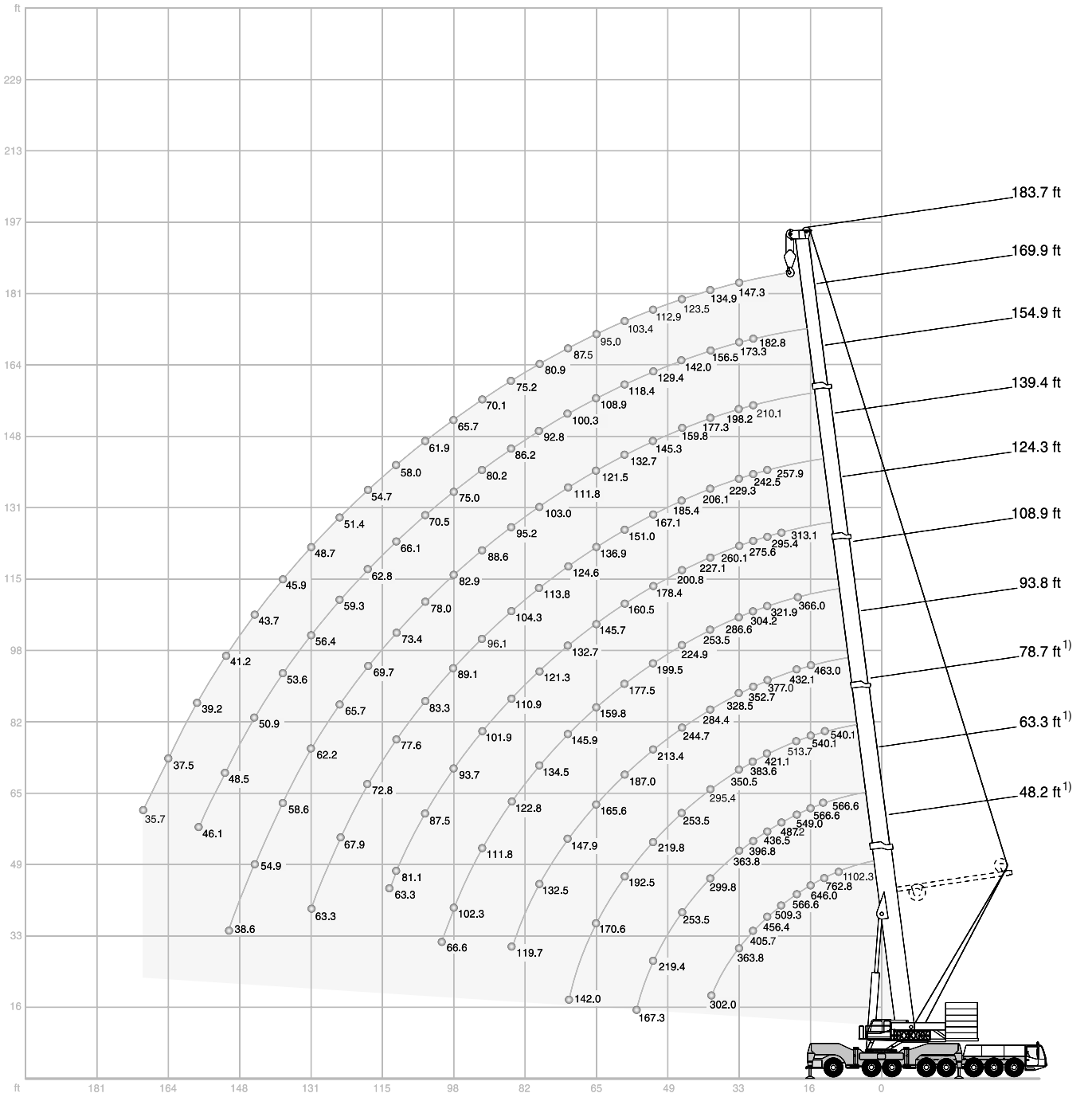

LIFTING CAPACITIES MAIN BOOM

352,700 lb | 360° | 85 %

Radius	ft	48.2 1)	48.2	63.3 1)	63.3	78.7 1)	78.7	93.8	108.9	124.3	139.4	154.9	169.9	183.7	Radius
							Main boom								
ft							1,000 lb								ft
10		1200.0*	566.6	-	-	-	-	-	-	-	-	-	-	-	10
12		840.0*	566.6	566.6	566.6	-	-	-	-	-	-	-	-	-	12
13		762.8*	566.6	566.6	566.6	540.1	540.1	-	-	-	-	-	-	-	13
15		698.9*	566.6	566.6	566.6	540.1	540.1	-	-	-	-	-	-	-	15
16		646.0*	557.8	566.6	555.6	540.1	540.1	463.0	-	-	-	-	-	-	16
20		566.6	493.8	549.0	493.8	513.7	493.8	432.1	366.0	-	-	-	-	-	20
23		509.3	443.1	487.2	443.1	465.2	443.1	405.7	343.9	313.1	-	-	-	-	23
26		456.4	401.2	436.5	401.2	421.1	401.2	377.0	321.9	295.4	257.9	-	-	-	26
30		405.7	366.0	396.8	366.0	383.6	366.0	352.7	304.2	275.6	242.5	210.1	182.8	-	30
33		363.8	337.3	363.8	337.3	350.5	335.1	328.5	286.6	260.1	229.3	198.2	173.3	147.3	33
39		302.0	288.8	299.8	288.8	295.4	286.6	284.4	253.5	227.1	206.1	177.3	156.5	134.9	39
46		-	-	253.5	246.9	253.5	244.7	244.7	224.9	200.8	185.4	159.8	142.0	123.5	46
53		-	-	219.4	214.3	219.8	211.4	213.4	199.5	178.4	167.1	145.3	129.4	112.9	53
59		-	-	167.3	170.9	192.5	185.0	187.0	177.5	160.5	151.0	132.7	118.4	103.4	59
66		-	-	-	-	170.6	163.6	165.6	159.8	145.7	136.9	121.5	108.9	95.0	66
72		-	-	-	-	141.8	142.0	147.9	145.9	132.7	124.6	111.8	100.3	87.5	72
79		-	-	-	-	-	-	132.5	134.5	121.3	113.8	103.0	92.8	80.9	79
85		-	-	-	-	-	-	119.7	122.8	110.9	104.3	95.2	86.2	75.2	85
92		-	-	-	-	-	-	-	111.8	101.9	96.1	88.6	80.2	70.1	92
98		-	-	-	-	-	-	-	102.3	93.7	89.1	82.9	75.0	65.7	98
105		-	-	-	-	-	-	-	66.6	87.5	83.3	78.0	70.5	61.9	105
112		-	-	-	-	-	-	-	-	81.1	77.6	73.4	66.1	58.0	112
118		-	-	-	-	-	-	-	-	63.3	72.8	69.7	62.8	54.7	118
125		-	-	-	-	-	-	-	-	-	67.9	65.7	59.3	51.4	125
131		-	-	-	-	-	-	-	-	-	63.3	62.2	56.4	48.7	131
138		-	-	-	-	-	-	-	-	-	-	58.6	53.6	45.9	138
144		-	-	-	-	-	-	-	-	-	-	54.9	50.9	43.7	144
151		-	-	-	-	-	-	-	-	-	-	38.6	48.5	41.2	151
158		-	-	-	-	-	-	-	-	-	-	-	46.1	39.2	158
164		-	-	-	-	-	-	-	-	-	-	-	-	37.5	164
171		-	-	-	-	-	-	-	-	-	-	-	-	35.7	171

Remarks

1) 396,800 lb counterweight, additional central outriggers, double hook block required

* over rear

LIFTING CAPACITIES MAIN BOOM

264,600 lb | 360° | 85 %

Radius	ft	48.2	63.3	78.7	93.8	108.9	124.3	139.4	154.9	169.9	183.7	Radius
		Main boom										
ft						1,000 lb						ft
10		566.6	-	-	-	-	-	-	-	-	-	10
12		566.6	566.6	-	-	-	-	-	-	-	-	12
13		566.6	566.6	540.1	-	-	-	-	-	-	-	13
15		566.6	566.6	540.1	-	-	-	-	-	-	-	15
16		544.5	542.3	540.1	463.0	-	-	-	-	-	-	16
20		482.8	482.8	480.6	432.1	366.0	-	-	-	-	-	20
23		432.1	434.3	432.1	405.7	343.9	313.1	-	-	-	-	23
26		392.4	392.4	390.2	377.0	321.9	295.4	257.9	-	-	-	26
30		357.1	357.1	357.1	352.7	304.2	275.6	242.5	210.1	182.8	-	30
33		321.9	321.9	319.7	321.9	286.6	260.1	229.3	198.2	173.3	147.3	33
39		264.6	264.6	262.4	264.6	253.5	227.1	206.1	177.3	156.5	134.9	39
46		-	224.9	222.7	224.9	224.9	200.8	185.4	159.8	142.0	123.5	46
53		-	191.8	190.5	191.8	195.1	178.4	167.1	145.3	129.4	112.9	53
59		-	166.0	168.7	166.2	169.3	160.5	151.0	132.7	118.4	103.4	59
66		-	-	146.4	143.1	146.8	144.4	136.9	121.5	108.9	95.0	66
72		-	-	126.5	123.0	126.8	124.3	124.3	111.8	100.3	87.5	72
79		-	-	-	107.1	110.5	108.0	108.0	103.0	92.8	80.9	79
85		-	-	-	99.2	97.2	94.8	94.6	95.2	86.2	75.2	85
92		-	-	-	-	86.2	83.8	83.8	85.1	80.2	70.1	92
98		-	-	-	-	77.2	75.2	74.5	76.1	75.0	65.7	98
105		-	-	-	-	66.6	70.8	66.8	68.1	70.1	61.9	105
112		-	-	-	-	-	64.2	60.2	61.3	63.3	58.0	112
118		-	-	-	-	-	58.4	54.5	55.6	57.5	54.7	118
125		-	-	-	-	-	-	51.4	50.5	52.2	51.4	125
131		-	-	-	-	-	-	48.5	45.9	47.8	47.8	131
138		-	-	-	-	-	-	-	42.5	43.7	43.9	138
144		-	-	-	-	-	-	-	40.6	39.9	39.9	144
151		-	-	-	-	-	-	-	38.6	36.6	36.6	151
158		-	-	-	-	-	-	-	-	33.5	33.5	158
164		-	-	-	-	-	-	-	-	-	30.6	164
171		-	-	-	-	-	-	-	-	-	28.2	171

LIFTING CAPACITIES MAIN BOOM WITH SSL

396,800 lb | 360° | **85 %**

Radius ft	108.9	124.3	139.4	154.9	169.9	183.7	Radius ft
	Main boom						
	1,000 lb						
20	412.3	-	-	-	-	-	20
23	399.0	366.0	328.5	-	-	-	23
26	383.6	354.9	321.9	275.6	-	-	26
30	357.1	343.9	315.3	269.0	266.8	-	30
33	326.3	321.9	308.6	264.6	253.5	229.3	33
39	275.6	273.4	271.2	251.3	222.7	204.6	39
46	240.3	235.9	233.7	233.7	203.0	182.5	46
53	210.5	209.0	206.6	205.7	193.1	163.4	53
59	183.0	185.6	184.1	183.4	182.8	153.2	59
66	166.0	163.6	166.7	165.1	164.7	145.5	66
72	154.3	145.3	154.8	149.9	149.7	138.0	72
79	141.1	130.1	140.0	134.5	136.9	131.0	79
85	128.1	117.1	127.0	121.5	123.9	123.9	85
92	117.1	106.0	115.7	110.5	112.7	113.1	92
98	103.2	96.6	106.3	100.8	103.0	103.4	98
105	-	88.2	97.7	92.4	94.6	94.8	105
112	-	78.5	90.4	84.9	87.1	87.3	112
118	-	-	83.8	78.3	80.2	80.7	118
125	-	-	76.1	72.3	74.3	74.7	125
131	-	-	55.6	66.8	69.0	69.2	131
138	-	-	-	61.3	63.9	64.4	138
144	-	-	-	51.6	59.5	59.7	144
151	-	-	-	-	55.1	55.6	151
158	-	-	-	-	47.4	51.8	158
164	-	-	-	-	-	48.1	164
171	-	-	-	-	-	41.0	171
177	-	-	-	-	-	-	177

264,600 lb | 360° | **85 %**

Radius ft	108.9	124.3	139.4	154.9	169.9	183.7	Radius ft
	Main boom						
	1,000 lb						
20	412.3	-	-	-	-	-	20
23	399.0	366.0	328.5	-	-	-	23
26	379.2	354.9	321.9	275.6	-	-	26
30	343.9	343.9	315.3	269.0	266.8	-	30
33	310.9	313.1	308.6	264.6	253.5	229.3	33
39	253.5	255.7	257.9	251.3	222.7	204.6	39
46	213.2	215.8	217.8	220.5	203.0	182.5	46
53	188.7	184.5	190.5	189.4	191.8	163.4	53
59	169.5	158.7	168.7	163.4	165.8	153.2	59
66	149.0	138.0	148.2	142.9	145.1	145.5	66
72	131.4	118.2	130.1	123.7	126.5	127.0	72
79	114.9	101.9	113.8	107.4	110.0	110.5	79
85	101.4	88.4	100.1	93.9	96.6	97.0	85
92	90.2	77.2	88.8	82.5	85.1	85.5	92
98	80.5	67.9	79.1	73.0	75.4	75.8	98
105	-	59.5	71.0	64.8	67.2	67.7	105
112	-	52.5	63.9	57.8	60.4	60.6	112
118	-	-	58.0	51.4	54.0	54.5	118
125	-	-	52.7	45.9	48.5	48.7	125
131	-	-	38.1	41.0	43.4	43.9	131
138	-	-	-	36.6	39.0	39.5	138
144	-	-	-	32.8	35.1	35.5	144
151	-	-	-	-	31.7	32.0	151
158	-	-	-	-	28.7	28.7	158
164	-	-	-	-	-	25.8	164
171	-	-	-	-	-	23.4	171
177	-	-	-	-	-	-	177

NOTES TO LIFTING CAPACITY

Ratings are in compliance with ISO 4305 and DIN 15019.2 (test load = 1.25 x suspended load + 0.1 x dead weight of boom head).
Weight of hook blocks and slings is part of the load, and is to be deducted from the capacity ratings.

Crane operation with main boom is permissible up to a

wind pressure of: 1.25 lb/ft^2
wind speed of: 21.9 mph

Consult operation manual for further details.

Note: Data published herein is intended as a guide only and shall not be construed to warrant applicability for lifting purposes.
Crane operation is subject to the computer charts and operation manual both supplied with the crane.

LIFTING CAPACITIES MAIN BOOM

132,300 lb — 360° — **85 %**

Radius	ft	48.2	63.3	78.7	93.8	108.9	124.3	139.4	154.9	169.9	183.7	Radius
						Main boom						
ft						1,000 lb						ft
10		566.6	-	-	-	-	-	-	-	-	-	10
12		566.6	566.6	-	-	-	-	-	-	-	-	12
13		566.6	566.6	540.1	-	-	-	-	-	-	-	13
15		560.0	557.8	540.1	-	-	-	-	-	-	-	15
16		524.7	524.7	522.5	463.0	-	-	-	-	-	-	16
20		465.2	465.2	463.0	432.1	366.0	-	-	-	-	-	20
23		403.4	403.4	401.2	403.4	343.9	313.1	-	-	-	-	23
26		348.3	348.3	350.5	348.3	321.9	295.4	257.9	-	-	-	26
30		304.2	304.2	306.4	304.2	304.2	275.6	242.5	210.1	182.8	-	30
33		269.0	269.0	271.2	269.0	269.0	251.3	229.3	198.2	173.3	147.3	33
39		186.5	187.2	191.1	197.1	192.5	189.2	185.0	177.3	156.5	134.9	39
46		-	138.0	147.0	145.7	141.3	144.0	138.7	140.7	142.0	123.5	46
53		-	112.9	114.9	113.5	117.5	114.4	113.3	114.0	111.6	111.8	53
59		-	91.3	92.8	95.5	95.2	95.2	94.8	91.9	89.5	89.9	59
66		-	-	76.9	80.7	79.1	79.8	78.5	75.8	73.6	73.9	66
72		-	-	67.7	68.3	68.6	67.5	66.1	63.5	61.3	61.7	72
79		-	-	-	58.6	59.3	57.8	56.7	54.0	51.8	52.0	79
85		-	-	-	50.9	51.4	49.8	48.7	46.3	43.9	44.3	85
92		-	-	-	-	45.0	43.4	42.3	39.7	37.3	37.5	92
98		-	-	-	-	39.7	38.1	36.8	34.0	31.5	32.0	98
105		-	-	-	-	35.3	33.3	32.0	29.3	26.9	27.1	105
112		-	-	-	-	-	29.3	28.0	25.1	22.7	22.9	112
118		-	-	-	-	-	26.0	24.5	21.6	19.2	19.4	118
125		-	-	-	-	-	-	21.4	18.5	16.1	16.3	125
131		-	-	-	-	-	-	18.7	15.9	13.4	13.7	131
138		-	-	-	-	-	-	-	13.4	11.0	11.2	138
144		-	-	-	-	-	-	-	11.5	9.0	9.0	144
151		-	-	-	-	-	-	-	9.9	7.1	7.1	151
158		-	-	-	-	-	-	-	-	5.5	5.5	158

0 lb — 360° — **85 %**

Radius	ft	48.2	63.3	78.7	93.8	108.9	124.3	139.4	154.9	169.9	183.7	Radius
						Main boom						
ft						1,000 lb						ft
10		566.6	-	-	-	-	-	-	-	-	-	10
12		566.6	566.6	-	-	-	-	-	-	-	-	12
13		566.6	566.6	540.1	-	-	-	-	-	-	-	13
15		524.7	524.7	522.5	-	-	-	-	-	-	-	15
16		465.2	465.2	429.9	359.4	-	-	-	-	-	-	16
20		346.1	295.4	269.0	231.5	198.2	184.5	-	-	-	-	20
23		215.6	204.6	185.8	174.2	155.9	143.7	130.3	-	-	-	23
26		134.9	149.0	143.3	133.2	124.3	112.9	103.2	92.2	-	-	26
30		90.8	103.0	111.1	106.0	99.9	91.3	84.0	75.0	67.0	-	30
33		65.5	76.1	83.1	84.4	82.5	75.4	69.4	61.9	55.1	52.5	33
39		37.7	46.1	52.0	53.1	54.0	52.2	49.4	43.4	38.1	36.4	39
46		-	30.2	35.3	36.2	37.0	35.5	34.2	30.6	25.6	24.0	46
53		-	20.3	24.9	25.6	26.5	24.9	23.8	19.8	15.4	14.3	53
59		-	13.4	17.6	18.5	19.2	17.6	16.5	12.3	8.2	7.3	59
66		-	-	12.6	13.2	13.9	12.3	11.0	6.8	-	-	66
72		-	-	7.9	8.6	9.5	7.7	6.4	-	-	-	72
79		-	-	-	5.1	5.7	-	-	-	-	-	79

LIFTING CAPACITIES MAIN BOOM WITH SSL

176,400 lb | 360° | 85 %

Radius	ft	108.9	124.3	139.4	154.9	169.9	183.7	Radius
		Main boom						
ft				1,000 lb				ft
20		412.3	-	-	-	-	-	20
23		399.0	366.0	328.5	-	-	-	23
26		357.1	354.9	321.9	275.6	-	-	26
30		315.3	317.5	315.3	269.0	266.8	198.0	30
33		280.0	284.4	286.6	264.6	253.5	229.3	33
39		224.9	227.1	229.3	229.3	222.7	204.6	39
46		194.4	178.6	193.1	185.6	183.6	179.0	46
53		153.9	138.0	152.6	144.8	148.4	148.8	53
59		124.8	110.0	123.7	116.4	119.5	120.2	59
66		103.8	89.5	102.5	95.7	98.5	99.0	66
72		87.7	73.9	86.4	79.8	82.7	83.1	72
79		75.2	61.3	74.1	67.5	70.1	70.5	79
85		65.0	50.9	63.9	57.1	60.2	60.6	85
92		56.9	42.5	55.6	48.5	51.6	52.0	92
98		49.8	35.3	48.3	41.2	44.1	44.5	98
105		-	29.5	42.1	35.1	37.9	38.4	105
112		-	24.5	36.8	29.8	32.6	32.8	112
118		-	-	32.2	25.1	28.0	28.2	118
125		-	-	28.2	21.2	23.8	24.3	125
131		-	-	15.0	17.9	20.3	20.7	131
138		-	-	-	14.8	17.2	17.4	138
144		-	-	-	12.1	14.3	14.6	144
151		-	-	-	-	11.9	12.1	151
158		-	-	-	-	9.7	9.9	158
164		-	-	-	-	-	7.9	164
171		-	-	-	-	-	6.2	171
177		-	-	-	-	-	-	177

NOTES TO LIFTING CAPACITY

Ratings are in compliance with ISO 4305 and DIN 15019.2 (test load = 1.25 x suspended load + 0.1 x dead weight of boom head).
Weight of hook blocks and slings is part of the load, and is to be deducted from the capacity ratings.

Crane operation with main boom is permissible up to a

wind pressure of: 1.25 lb/ft^2
wind speed of: 21.9 mph

Consult operation manual for further details.

Note: Data published herein is intended as a guide only and shall not be construed to warrant applicability for lifting purposes.
Crane operation is subject to the computer charts and operation manual both supplied with the crane.

WORKING RANGES MAIN BOOM EXTENSION WITH / WITHOUT SSL

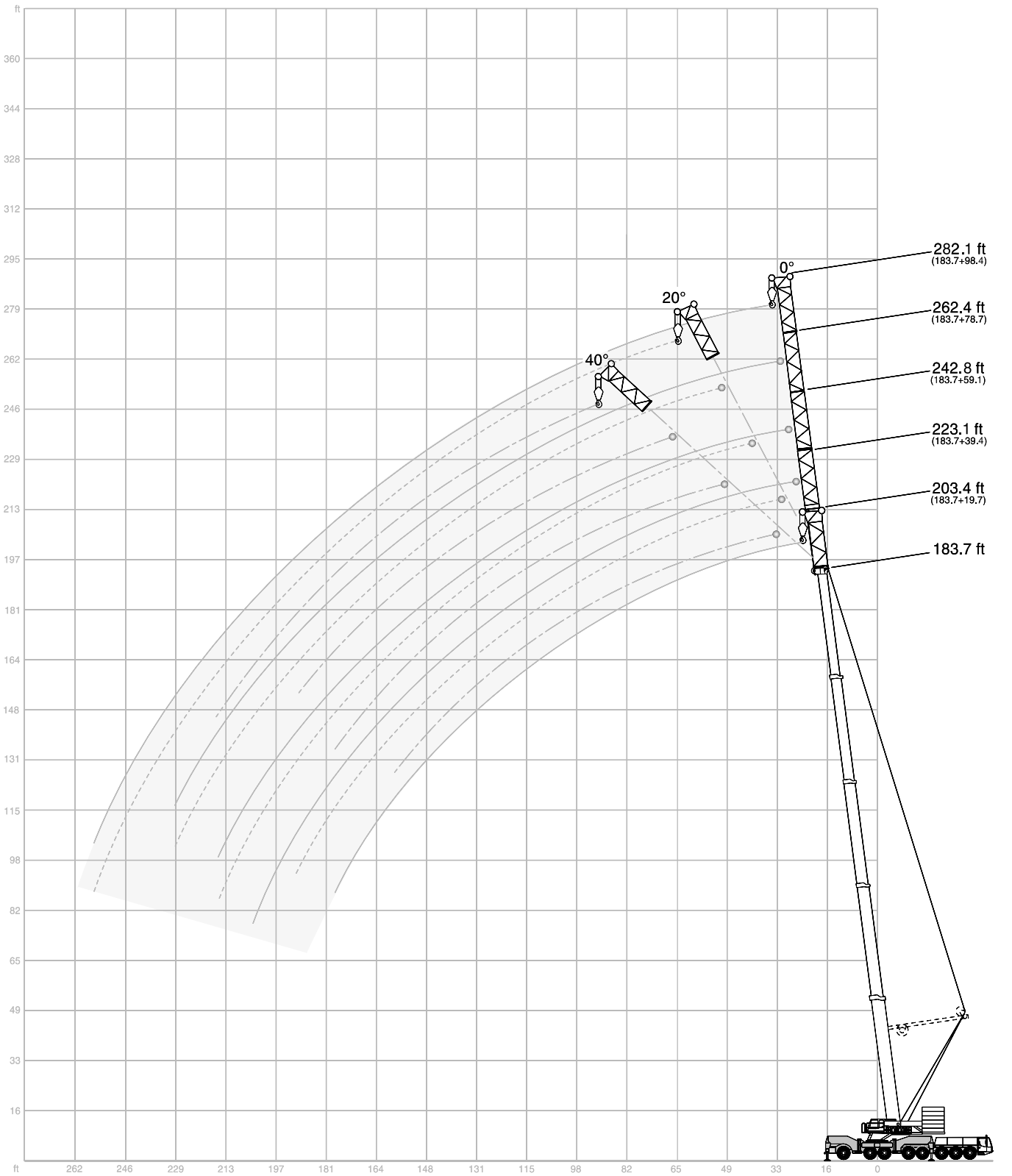

LIFTING CAPACITIES MAIN BOOM EXTENSION

308,600 lb 360° **85 %**

183.7 ft Main boom

	Extension													
	19.7 ft	39.4 ft			59.1 ft			78.7 ft			98.4 ft			
Radius	0°	0°	20°	40°*	0°	20°	40°*	0°	20°	40°*	0°	20°	40°	Radius
ft							1,000 lb							ft
39	106.7	-	-	-	-	-	-	-	-	-	-	-	-	39
46	97.4	82.7	-	-	68.6	-	-	-	-	-	-	-	-	46
53	89.1	75.6	-	-	63.5	-	-	55.3	-	-	-	-	-	53
59	82.0	69.4	59.7	-	59.1	-	-	51.6	-	-	45.0	-	-	59
66	75.6	63.9	56.4	49.4	54.9	43.7	-	48.1	-	-	41.9	-	-	66
72	69.9	59.1	53.1	47.2	51.1	41.7	-	45.0	-	-	39.2	-	-	72
79	65.0	54.9	50.0	45.2	47.8	39.7	34.2	42.1	33.3	-	36.8	-	-	79
85	60.6	51.1	47.2	43.2	44.8	37.9	33.1	39.5	31.7	-	34.6	-	-	85
92	56.9	48.1	44.5	41.2	42.1	36.2	32.0	37.3	30.2	-	32.6	25.6	-	92
98	53.4	45.2	42.1	39.2	39.5	34.6	30.9	35.1	28.9	24.9	30.6	24.5	-	98
105	50.0	42.5	39.9	37.3	37.5	33.1	29.8	33.3	27.8	24.0	29.1	23.4	-	105
112	47.0	40.1	37.9	35.5	35.3	31.5	28.7	31.3	26.5	23.4	27.6	22.5	19.4	112
118	44.3	37.9	35.9	34.0	33.5	30.0	27.6	29.8	25.4	22.7	26.0	21.6	18.7	118
125	41.7	35.7	34.2	32.2	31.7	28.7	26.7	28.2	24.5	22.0	24.7	20.7	18.1	125
131	39.2	34.0	32.4	30.6	30.0	27.6	25.8	26.9	23.4	21.4	23.6	19.8	17.4	131
138	37.0	32.0	30.9	29.1	28.4	26.2	24.9	25.6	22.5	20.5	22.3	19.0	16.8	138
144	35.1	30.2	29.5	28.0	27.1	25.1	24.0	24.3	21.6	19.8	21.2	18.3	16.3	144
151	33.1	28.7	28.2	26.7	25.6	24.0	23.1	22.9	20.7	19.2	20.3	17.4	15.7	151
158	31.5	27.3	26.9	25.6	24.5	23.1	22.5	21.8	20.1	18.7	19.2	16.8	15.2	158
164	30.0	25.8	25.6	-	23.1	22.0	21.6	20.7	19.2	18.1	18.3	16.1	14.8	164
177	27.3	23.6	23.4	-	20.9	20.3	20.1	18.5	17.9	16.8	16.5	14.8	13.9	177
190	-	21.6	21.4	-	19.0	18.5	-	16.8	16.3	15.7	14.8	13.4	13.0	190
203	-	19.8	-	-	17.2	16.8	-	15.0	15.0	-	13.2	12.1	12.1	203
217	-	-	-	-	15.7	15.2	-	13.4	13.4	-	11.9	11.0	11.2	217
230	-	-	-	-	-	-	-	12.1	12.1	-	10.4	9.9	-	230
243	-	-	-	-	-	-	-	10.8	-	-	9.0	8.6	-	243
256	-	-	-	-	-	-	-	-	-	-	7.7	7.5	-	256

88,200 lb 360° **85 %**

183.7 ft Main boom

	Extension													
	19.7 ft	39.4 ft			59.1 ft			78.7 ft			98.4 ft			
Radius	0°	0°	20°	40°	0°	20°	40°	0°	20°	40°	0°	20°	40°	Radius
ft							1,000 lb							ft
39	106.7	-	-	-	-	-	-	-	-	-	-	-	-	39
46	97.4	82.7	-	-	68.6	-	-	-	-	-	-	-	-	46
53	81.6	75.6	-	-	63.5	-	-	55.3	-	-	-	-	-	53
59	65.0	63.7	59.7	-	59.1	-	-	51.6	-	-	45.0	-	-	59
66	52.7	51.4	56.4	49.4	50.9	43.7	-	48.1	-	-	41.9	-	-	66
72	43.0	41.9	47.6	47.2	41.7	41.7	-	41.4	-	-	39.2	-	-	72
79	35.3	34.2	39.5	43.9	34.2	39.7	34.2	34.2	33.3	-	34.4	-	-	79
85	28.9	28.0	32.6	36.6	28.0	35.1	33.1	28.0	31.7	-	28.4	-	-	85
92	23.6	22.9	27.1	30.4	22.9	29.1	32.0	23.1	30.2	-	23.6	25.6	-	92
98	19.0	18.5	22.3	25.4	18.7	24.3	29.3	19.0	26.2	24.9	19.4	24.5	-	98
105	15.2	15.0	18.3	20.9	15.0	20.3	24.7	15.2	22.0	24.0	15.9	23.4	-	105
112	11.9	11.7	14.8	17.0	11.9	16.5	20.7	12.1	18.5	23.4	12.8	20.5	19.4	112
118	9.0	8.6	11.5	13.4	9.3	13.4	17.2	9.5	15.2	20.5	10.1	17.2	18.7	118
125	6.4	6.2	8.6	10.4	6.8	10.8	14.1	7.1	12.3	17.2	7.7	14.3	18.1	125
131	-	-	6.2	7.7	4.6	8.4	11.0	5.1	9.9	14.3	5.7	11.9	17.4	131
138	-	-	-	5.3	-	6.2	8.6	-	7.7	11.7	-	9.5	14.8	138
144	-	-	-	-	-	-	6.2	-	5.7	9.3	-	7.5	12.3	144
151	-	-	-	-	-	-	-	-	-	7.3	-	5.7	10.1	151
158	-	-	-	-	-	-	-	-	-	5.3	-	-	7.9	158
164	-	-	-	-	-	-	-	-	-	-	-	-	6.2	164
177	-	-	-	-	-	-	-	-	-	-	-	-	-	177

Remarks

* 264,600 lb Counterweight

LIFTING CAPACITIES MAIN BOOM EXTENSION WITH SSL 0°

396,800 lb 360° **85 %**

183.7 ft Main boom

	Extension													
	19.7 ft	39.4 ft			59.1 ft			78.7 ft			98.4 ft			
Radius	0°	0°	20°	40°	0°	20°	40°	0°	20°	40°	0°	20°	40°	Radius
ft							1,000 lb							ft
30	110.2	-	-	-	-	-	-	-	-	-	-	-	-	30
33	110.2	-	-	-	-	-	-	-	-	-	-	-	-	33
39	110.2	100.8	-	-	82.5	-	-	-	-	-	-	-	-	39
46	110.2	99.4	-	-	81.8	-	-	66.8	-	-	55.3	-	-	46
53	110.2	97.7	85.1	-	80.7	-	-	63.9	-	-	53.1	-	-	53
59	110.2	95.5	82.2	67.9	79.1	59.1	-	61.1	-	-	50.9	-	-	59
66	107.6	92.8	79.1	65.7	77.4	56.4	-	58.4	-	-	48.9	-	-	66
72	104.7	90.2	76.3	63.5	75.2	54.0	-	55.8	39.2	-	46.7	-	-	72
79	101.9	87.1	73.2	61.5	72.8	51.8	41.2	53.1	37.9	-	44.8	-	-	79
85	98.8	83.8	70.1	59.5	70.1	49.8	40.1	50.7	36.4	-	43.0	30.9	-	85
92	95.7	80.7	67.0	57.8	67.2	47.8	39.2	48.5	35.3	28.9	41.0	29.8	-	92
98	92.4	77.4	64.2	56.2	64.6	46.1	38.1	46.1	34.0	28.2	39.2	28.7	-	98
105	89.1	74.3	61.3	54.7	61.7	44.5	37.5	44.1	33.1	27.6	37.5	27.6	22.3	105
112	85.8	71.0	58.6	53.1	59.1	43.0	36.6	42.1	32.0	27.1	35.9	26.7	21.8	112
118	82.0	68.1	56.4	51.8	56.7	41.7	35.9	40.3	31.1	26.7	34.4	25.8	21.2	118
125	76.1	65.3	54.2	50.5	54.0	40.3	35.1	38.6	30.2	26.0	32.8	24.9	20.7	125
131	70.5	62.6	52.5	49.2	51.8	39.2	34.4	37.0	29.5	25.6	31.5	24.3	20.3	131
138	65.8	60.1	50.9	48.2	49.6	38.3	33.8	35.7	28.8	25.2	30.3	23.6	19.8	138
144	61.1	57.5	49.4	47.2	47.4	37.3	33.3	34.4	28.0	24.9	29.1	22.9	19.4	144
151	57.0	55.2	48.1	46.3	45.6	36.4	33.0	33.3	27.3	24.6	28.0	22.3	19.1	151
158	52.9	52.9	46.7	45.4	43.9	35.5	32.6	32.2	26.7	24.3	26.9	21.6	18.7	158
164	49.5	49.5	45.6	-	42.2	34.7	32.3	31.2	26.1	23.9	26.1	21.1	18.4	164
177	42.9	43.2	42.9	-	39.2	33.4	31.7	29.4	25.1	23.4	24.6	20.1	17.9	177
190	-	37.8	38.6	-	36.8	32.4	-	28.1	24.3	22.9	23.1	19.2	17.3	190
203	-	32.0	-	-	34.0	31.7	-	26.9	23.5	-	22.0	18.3	17.1	203
217	-	-	-	-	29.4	30.6	-	25.8	22.7	-	20.9	17.6	16.8	217
230	-	-	-	-	-	-	-	24.8	22.3	-	20.0	17.2	-	230
243	-	-	-	-	-	-	-	-	-	-	19.0	16.8	-	243
256	-	-	-	-	-	-	-	-	-	-	17.9	16.5	-	256

220,500 lb 360° **85 %**

	19.7 ft	39.4 ft			59.1 ft			78.7 ft			98.4 ft			
ft							1,000 lb							ft
30	110.2	-	-	-	-	-	-	-	-	-	-	-	-	30
33	110.2	-	-	-	-	-	-	-	-	-	-	-	-	33
39	110.2	100.8	-	-	82.5	-	-	-	-	-	-	-	-	39
46	110.2	99.4	-	-	81.8	-	-	66.8	-	-	55.3	-	-	46
53	110.2	97.7	85.1	-	80.7	-	-	63.9	-	-	53.1	-	-	53
59	110.2	95.5	82.2	67.9	79.1	59.1	-	61.1	-	-	50.9	-	-	59
66	107.6	92.8	79.1	65.7	77.4	56.4	-	58.4	-	-	48.9	-	-	66
72	104.7	90.2	76.3	63.5	75.2	54.0	-	55.8	39.2	-	46.7	-	-	72
79	93.5	87.1	73.2	61.5	72.8	51.8	41.2	53.1	37.9	-	44.8	-	-	79
85	81.4	81.8	70.1	59.5	70.1	49.8	40.1	50.7	36.4	-	43.0	30.9	-	85
92	71.2	71.7	67.0	57.8	67.2	47.8	39.2	48.5	35.3	28.9	41.0	29.8	-	92
98	62.8	63.3	64.2	56.2	64.6	46.1	38.1	46.1	34.0	28.2	39.2	28.7	-	98
105	55.6	56.0	59.5	54.7	57.3	44.5	37.5	44.1	33.1	27.6	37.5	27.6	22.3	105
112	49.2	49.6	52.9	53.1	50.9	43.0	36.6	42.1	32.0	27.1	35.9	26.7	21.8	112
118	43.4	43.9	47.2	49.4	45.2	41.7	35.9	40.3	31.1	26.7	34.4	25.8	21.2	118
125	38.6	38.8	41.9	44.1	40.1	40.3	35.1	38.6	30.2	26.0	32.8	24.9	20.7	125
131	34.0	34.4	37.3	39.0	35.7	39.2	34.4	37.0	29.5	25.6	31.5	24.3	20.3	131
138	30.3	30.6	33.2	34.7	32.0	35.5	33.8	33.4	28.8	25.2	30.3	23.6	19.8	138
144	26.7	26.9	29.1	30.4	28.2	31.7	33.3	29.8	28.0	24.9	29.1	22.9	19.4	144
151	23.6	23.8	25.9	27.0	25.1	28.4	30.3	26.7	27.3	24.6	27.1	22.3	19.1	151
158	20.5	20.7	22.7	23.6	22.0	25.1	27.3	23.6	26.7	24.3	25.1	21.6	18.7	158
164	18.1	18.3	20.0	-	19.5	22.4	24.3	21.1	24.4	23.9	22.6	21.1	18.4	164
177	13.6	13.7	15.0	-	14.9	17.3	18.5	16.3	19.6	22.0	17.9	20.1	17.9	177
190	-	9.8	10.8	-	11.0	12.9	-	12.3	15.2	17.1	13.8	17.5	17.3	190
203	-	6.4	-	-	7.7	9.1	-	9.0	11.5	-	10.4	13.7	15.5	203
217	-	-	-	-	4.9	6.0	-	6.2	7.9	-	7.3	10.1	11.9	217
230	-	-	-	-	-	-	-	-	5.1	-	4.9	7.1	-	230

LIFTING CAPACITIES MAIN BOOM EXTENSION WITH SSL 30°

396,800 lb 360° **85 %**

183.7 ft Main boom

Radius	Extension 39.4 ft 0°	59.1 ft 0°	78.7 ft 0°	98.4 ft 0°	Radius
ft			1,000 lb		ft
39	108.0	92.4	-	-	39
46	104.7	88.2	72.8	63.1	46
53	101.2	84.2	67.5	58.4	53
59	97.2	80.2	62.8	54.2	59
66	93.0	76.3	58.6	50.5	66
72	88.6	72.5	54.9	47.2	72
79	84.2	69.0	51.6	44.3	79
85	79.8	65.5	48.7	41.7	85
92	75.4	62.2	46.1	39.2	92
98	71.2	59.1	43.7	37.3	98
105	67.2	56.2	41.9	35.5	105
112	63.3	53.4	39.9	33.7	112
118	60.0	50.7	38.4	32.4	118
125	56.7	48.3	36.8	31.1	125
131	53.8	46.1	35.3	29.8	131
138	51.1	44.1	34.1	28.7	138
144	48.5	42.1	32.8	27.6	144
151	46.1	40.3	31.7	26.6	151
158	43.7	38.6	30.6	25.6	158
164	41.6	37.0	29.5	24.7	164
177	37.4	34.0	27.6	23.0	177
190	33.3	31.0	25.9	21.6	190
203	-	28.1	24.3	20.2	203
217	-	24.8	22.5	19.0	217
230	-	-	20.9	18.0	230
243	-	-	-	16.8	243
256	-	-	-	15.7	256

220,500 lb 360° **85 %**

183.7 ft Main boom

Radius	Extension 39.4 ft 0°	59.1 ft 0°	78.7 ft 0°	98.4 ft 0°	Radius
ft			1,000 lb		ft
39	108.0	92.4	-	-	39
46	104.7	88.2	72.8	63.1	46
53	101.2	84.2	67.5	58.4	53
59	97.2	80.2	62.8	54.2	59
66	93.0	76.3	58.6	50.5	66
72	88.6	72.5	54.9	47.2	72
79	84.2	69.0	51.6	44.3	79
85	79.8	65.5	48.7	41.7	85
92	71.7	62.2	46.1	39.2	92
98	63.3	59.1	43.7	37.3	98
105	56.0	56.2	41.9	35.5	105
112	49.6	50.9	39.9	33.7	112
118	43.9	45.2	38.4	32.4	118
125	38.8	40.1	36.8	31.1	125
131	34.4	35.7	35.3	29.8	131
138	30.6	32.0	32.5	28.7	138
144	26.9	28.2	29.8	27.6	144
151	23.8	25.1	26.7	26.3	151
158	20.7	22.0	23.6	25.1	158
164	18.3	19.5	21.1	22.6	164
177	13.7	14.9	16.3	17.9	177
190	9.8	11.0	12.3	13.8	190
203	-	7.6	9.0	10.4	203
217	-	4.9	6.2	7.3	217
230	-	-	-	4.9	230

WORKING RANGES FIXED FLY JIB WITH / WITHOUT SSL

OFFSET FIXED FLY JIB

A	B	C 0° / 20° / 40°
86.6 ft	48.9 ft	37.7 ft
106.3 ft	48.9 ft	57.4 ft
126.0 ft	68.6 ft	57.4 ft
145.7 ft	68.6 ft	77.0 ft
165.4 ft	88.2 ft	77.0 ft
185.0 ft	88.2 ft	96.8 ft
204.7 ft	107.9 ft	96.8 ft

(27.6 ft, 47.2 ft + 66.9 ft only 0°)

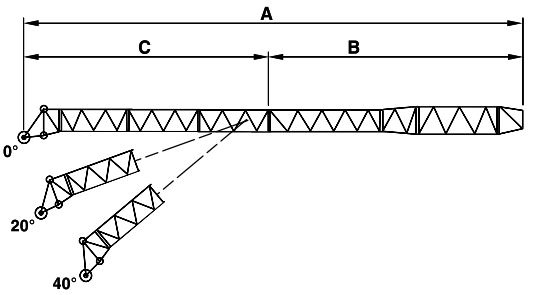

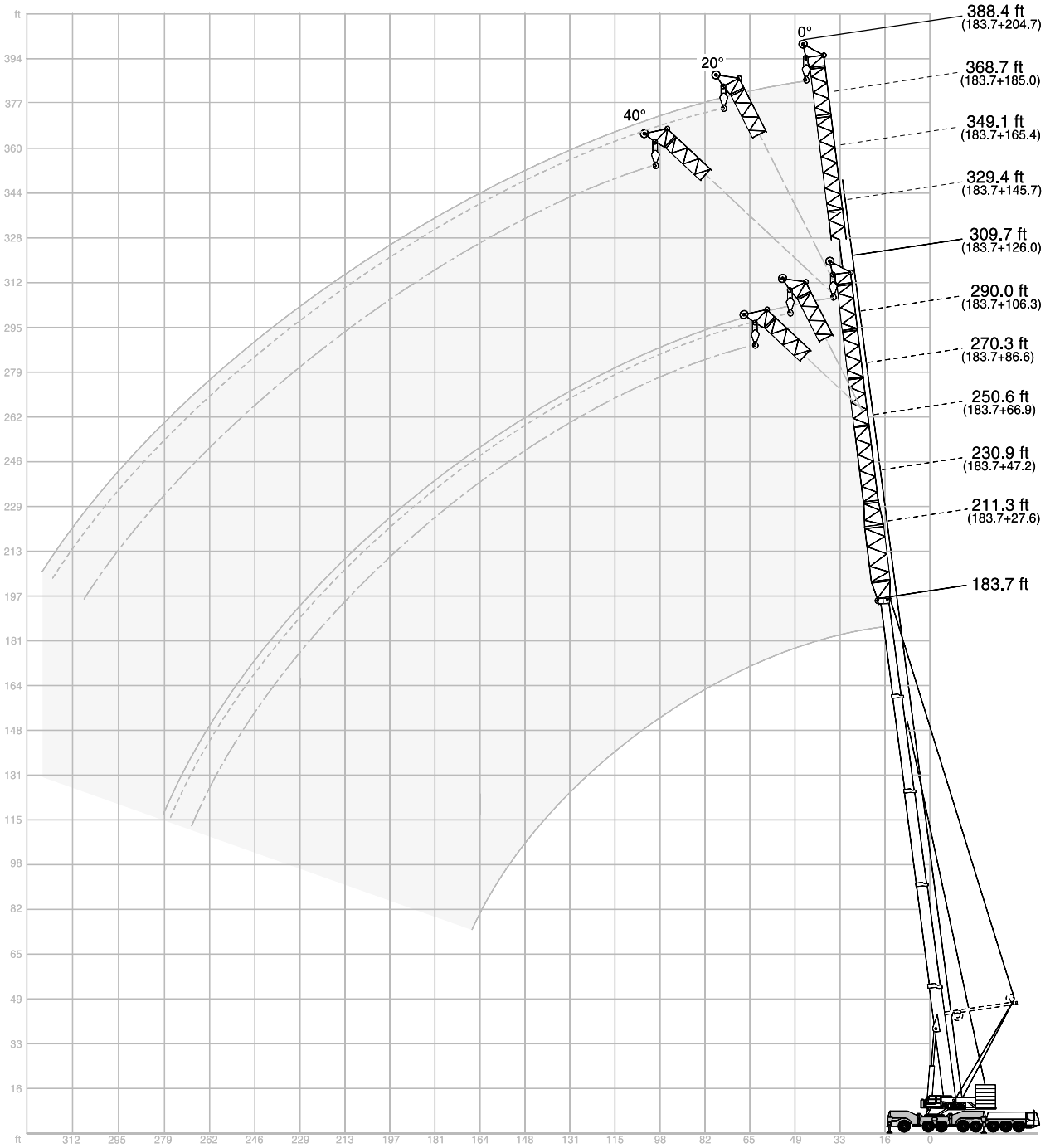

LIFTING CAPACITIES FIXED FLY JIB

360° 85 %

183.4 ft Main boom

Radius ft	Fly jib 27.6 ft 0°	47.2 ft 0°	66.9 ft 0°	86.6 ft 0°	86.6 ft 20°	86.6 ft 40°	106.3 ft 0°	106.3 ft 20°	106.3 ft 40°	126.0 ft 0°	126.0 ft 20°	126.0 ft 40°	Radius ft
	1,000 lb												
46	90.6	76.9	-	-	-	-	-	-	-	-	-	-	46
53	82.2	70.3	62.6	52.7	-	-	-	-	-	-	-	-	53
59	74.7	64.4	58.0	48.7	-	-	43.0	-	-	-	-	-	59
66	68.3	59.1	53.8	45.2	40.6	-	39.9	-	-	35.1	-	-	66
72	62.6	54.2	49.8	41.9	37.9	-	37.0	-	-	32.4	-	-	72
79	58.1	50.3	46.5	39.1	35.5	33.5	34.6	30.4	-	30.2	-	-	79
85	53.6	46.3	43.2	36.4	33.3	31.7	32.2	28.7	-	28.0	25.6	-	85
92	49.9	43.1	40.3	34.1	31.3	30.0	30.1	26.9	25.1	26.1	24.0	-	92
98	46.3	39.9	37.5	31.7	29.5	28.2	28.0	25.4	23.8	24.3	22.5	21.4	98
105	43.5	37.4	35.2	29.8	28.0	26.9	26.3	24.0	22.7	22.7	21.2	20.3	105
112	40.8	34.8	32.8	27.8	26.5	25.4	24.7	22.7	21.4	21.2	19.8	19.2	112
118	38.4	32.7	31.0	26.2	25.1	24.3	23.3	21.4	20.5	19.8	18.7	18.1	118
125	35.9	30.6	29.1	24.7	23.8	22.9	21.8	20.3	19.4	18.5	17.6	17.2	125
131	34.0	28.9	27.4	23.4	22.5	21.8	20.6	19.2	18.5	17.5	16.5	16.1	131
144	30.3	25.7	24.5	20.8	20.3	19.8	18.4	17.4	16.8	15.5	14.8	14.6	144
158	27.2	22.9	21.9	18.5	18.3	18.1	16.4	15.7	15.2	13.7	13.2	13.0	158
171	24.4	20.5	19.7	16.4	16.4	16.5	14.6	14.1	13.9	12.0	11.8	11.7	171
184	21.5	18.4	18.0	14.7	14.8	14.9	12.9	12.8	12.7	10.6	10.6	10.5	184
197	18.6	16.5	16.5	13.2	13.1	13.2	11.4	11.5	11.5	9.3	9.4	9.3	197
210	-	14.7	15.0	11.7	11.7	-	10.1	10.3	10.4	8.2	8.3	8.4	210
223	-	-	13.7	10.6	10.6	-	9.0	9.0	-	7.1	7.3	7.4	223
236	-	-	12.4	9.5	9.5	-	7.9	8.2	-	6.2	6.4	-	236
249	-	-	-	8.6	-	-	7.1	7.3	-	5.3	5.5	-	249
263	-	-	-	-	-	-	6.4	6.4	-	4.4	4.6	-	263
276	-	-	-	-	-	-	5.7	-	-	-	-	-	276

ft	145.7 ft			165.4 ft			185.0 ft			204.7 ft			ft
	1,000 lb												
72	29.3	-	-	25.8	-	-	-	-	-	-	-	-	72
79	27.3	-	-	24.0	-	-	21.2	-	-	-	-	-	79
85	25.4	-	-	22.3	-	-	19.8	-	-	17.2	-	-	85
92	23.7	-	-	20.7	-	-	18.5	-	-	16.0	-	-	92
98	22.0	20.1	-	19.2	17.9	-	17.2	-	-	14.8	-	-	98
105	20.6	19.0	-	17.9	16.8	-	16.0	-	-	13.7	-	-	105
112	19.2	17.9	16.8	16.5	15.7	-	14.8	13.7	-	12.6	-	-	112
118	18.0	16.8	15.9	15.4	14.8	14.3	13.7	12.8	-	11.6	11.0	-	118
125	16.8	15.9	15.0	14.3	13.9	13.4	12.6	11.9	-	10.6	10.4	-	125
131	15.8	14.8	14.3	13.3	13.0	12.6	11.7	11.2	-	9.7	9.5	-	131
144	13.9	13.2	12.8	11.6	11.2	11.2	10.0	9.7	9.7	7.9	8.2	8.4	144
158	12.2	11.7	11.5	10.0	9.9	9.9	8.5	8.4	8.4	6.4	6.8	7.1	158
171	10.8	10.4	10.3	8.7	8.6	8.7	7.2	7.2	7.4	5.2	5.6	6.0	171
184	9.5	9.3	9.1	7.6	7.5	7.6	6.1	6.2	6.3	-	4.4	5.0	184
197	8.2	8.2	8.2	6.5	6.5	6.6	5.1	5.1	5.3	-	-	-	197
210	7.2	7.2	7.3	5.5	5.5	5.7	-	-	4.4	-	-	-	210
223	6.2	6.2	6.4	4.6	4.6	4.9	-	-	-	-	-	-	223
236	5.3	5.5	5.6	-	-	-	-	-	-	-	-	-	236
249	4.4	4.6	4.9	-	-	-	-	-	-	-	-	-	249

Remarks

Counterweight	88,200 lb	132,300 lb	176,400 lb	220,500 lb	264,600 lb	308,600 lb	352,700 lb

Max. capacities with minimum counterweight

Further counterweight configurations on request

LIFTING CAPACITIES FIXED FLY JIB WITH SSL

360° 85 %

183.4 ft Main boom

Radius ft	27.6 ft 0°	47.2 ft 0°	66.9 ft 0°	Fly jib 86.6 ft 0°	86.6 ft 20°	86.6 ft 40°	106.3 ft 0°	106.3 ft 20°	106.3 ft 40°	126.0 ft 0°	126.0 ft 20°	126.0 ft 40°	Radius ft
						1,000 lb							
39	159.0	95.7	-	-	-	-	-	-	-	-	-	-	39
46	146.4	123.2	103.6	58.6	-	-	-	-	-	-	-	-	46
53	134.7	113.1	95.2	81.8	-	-	70.8	-	-	41.9	-	-	53
59	124.1	104.3	88.0	75.4	57.1	-	65.7	-	-	57.8	-	-	59
66	114.4	96.3	81.6	69.9	54.0	-	60.8	-	-	53.6	-	-	66
72	105.6	89.5	76.1	64.8	50.9	43.9	56.7	40.6	-	49.8	-	-	72
79	97.8	83.7	71.4	60.7	48.3	41.9	53.0	38.6	-	46.6	35.1	-	79
85	91.5	77.8	66.8	56.7	45.6	40.1	49.4	36.6	31.3	43.4	33.3	-	85
92	87.0	73.1	63.2	53.4	43.4	38.6	46.4	34.8	30.4	40.7	31.5	27.3	92
98	82.5	68.3	59.5	50.0	41.2	36.8	43.4	33.1	29.3	37.9	30.0	26.2	98
105	78.5	64.8	56.7	47.4	39.5	35.5	41.1	31.5	28.2	35.7	28.7	25.4	105
112	74.5	61.5	53.8	44.8	37.5	34.0	38.8	30.0	27.3	33.5	27.1	24.3	112
118	71.3	58.8	51.3	42.7	35.9	32.8	36.8	28.7	26.2	31.7	25.8	23.4	118
125	68.1	56.0	48.7	40.6	34.4	31.5	34.8	27.3	25.4	30.0	24.7	22.5	125
131	64.0	53.6	46.2	38.7	33.1	30.4	33.3	26.0	24.3	28.5	23.6	21.6	131
144	55.7	49.2	41.3	35.2	30.6	28.2	30.4	23.8	22.5	25.9	21.4	20.1	144
158	47.6	45.4	37.8	32.0	28.2	26.5	27.9	21.8	20.7	23.6	19.6	18.5	158
171	40.8	41.2	35.2	29.0	26.2	24.7	25.7	20.3	19.2	21.6	18.1	17.2	171
184	35.1	36.0	32.8	26.2	24.5	23.4	23.7	19.0	17.9	19.8	16.8	15.9	184
197	27.3	31.1	30.9	23.7	22.9	-	21.8	17.9	16.8	18.3	15.4	14.8	197
210	-	25.2	29.2	22.3	21.6	-	20.1	17.0	15.9	16.8	14.3	13.7	210
223	-	-	25.8	20.9	20.3	-	18.4	16.1	-	15.4	13.4	12.8	223
236	-	-	19.4	19.8	18.5	-	16.8	15.4	-	14.1	12.6	-	236
249	-	-	-	16.8	-	-	15.4	14.8	-	12.8	11.7	-	249
263	-	-	-	-	-	-	14.6	13.4	-	12.0	10.8	-	263
276	-	-	-	-	-	-	11.0	-	-	11.2	9.9	-	276
289	-	-	-	-	-	-	-	-	-	9.0	-	-	289

ft	145.7 ft			165.4 ft			185.0 ft			204.7 ft			ft
						1,000 lb							
59	33.1	-	-	27.3	-	-	-	-	-	-	-	-	59
66	47.2	-	-	27.1	-	-	22.7	-	-	-	-	-	66
72	44.1	-	-	39.0	-	-	34.8	-	-	17.4	-	-	72
79	41.2	-	-	36.6	-	-	32.6	-	-	28.9	-	-	79
85	38.4	26.7	-	34.2	-	-	30.4	-	-	26.9	-	-	85
92	36.0	25.8	-	32.1	24.0	-	28.5	-	-	25.2	-	-	92
98	33.7	24.7	-	30.0	22.7	-	26.7	-	-	23.6	-	-	98
105	31.7	23.6	20.1	28.1	21.6	-	25.0	19.2	-	22.0	-	-	105
112	29.8	22.7	19.4	26.2	20.5	18.1	23.4	18.3	-	20.5	15.4	-	112
118	28.2	21.8	18.7	24.8	19.6	17.2	22.0	17.4	-	19.2	14.8	-	118
125	26.7	20.7	18.3	23.4	18.5	16.5	20.7	16.5	-	17.9	14.1	-	125
131	25.4	19.8	17.6	22.0	17.6	15.9	19.5	15.7	13.9	16.8	13.4	-	131
144	22.9	18.3	16.5	19.7	16.1	14.6	17.3	14.1	12.8	14.7	12.1	11.2	144
158	20.8	16.8	15.4	17.9	14.6	13.2	15.4	12.6	11.7	12.9	10.8	10.1	158
171	19.0	15.2	14.3	16.2	13.2	12.1	13.9	11.2	10.6	11.5	9.5	9.0	171
184	17.4	14.1	13.4	14.7	11.9	11.2	12.6	9.9	9.5	10.1	8.2	7.7	184
197	16.1	13.0	12.6	13.2	10.8	10.4	11.4	8.8	8.4	9.0	6.8	6.6	197
210	14.8	12.1	11.7	12.1	9.9	9.5	10.3	7.7	7.3	8.0	5.3	5.5	210
223	13.6	11.2	11.0	11.0	9.0	8.8	9.1	6.6	6.4	7.2	-	-	223
236	12.3	10.6	10.4	10.1	8.2	8.2	8.2	5.7	5.3	6.4	-	-	236
249	11.4	9.9	-	9.0	7.3	7.5	7.5	4.9	4.4	5.6	-	-	249
263	10.3	9.3	-	8.3	6.6	7.1	6.6	-	-	4.9	-	-	263
276	9.3	8.8	-	7.5	5.7	-	6.0	-	-	-	-	-	276
289	8.6	8.2	-	6.6	5.1	-	5.2	-	-	-	-	-	289
302	8.0	-	-	5.7	-	-	-	-	-	-	-	-	302
315	4.6	-	-	4.9	-	-	-	-	-	-	-	-	315
328	-	-	-	-	-	-	-	-	-	-	-	-	328

Remarks: see page 20

Counterweight	176,400 lb	220,500 lb	264,600 lb	308,600 lb	352,700 lb	396,800 lb

LIFTING CAPACITIES FIXED FLY JIB

360° 85 %

169.9 ft Main boom

Radius ft	Fly jib 27.6 ft 0°	47.2 ft 0°	66.9 ft 0°	86.6 ft 0°	86.6 ft 20°	86.6 ft 40°	106.3 ft 0°	106.3 ft 20°	106.3 ft 40°	126.0 ft 0°	126.0 ft 20°	126.0 ft 40°	Radius ft
	1,000 lb												
39	117.7	-	-	-	-	-	-	-	-	-	-	-	39
46	106.0	89.1	76.1	-	-	-	-	-	-	-	-	-	46
53	96.1	81.6	70.1	60.6	-	-	-	-	-	-	-	-	53
59	87.5	75.0	64.6	56.0	-	-	48.5	-	-	42.8	-	-	59
66	80.0	69.0	59.7	51.6	45.2	-	45.0	-	-	39.7	-	-	66
72	73.6	63.7	55.3	47.8	42.3	39.5	41.7	-	-	36.8	-	-	72
79	68.6	59.3	51.7	44.5	39.7	37.3	38.8	34.2	-	34.3	30.6	-	79
85	63.5	54.9	48.1	41.2	37.3	35.3	35.9	32.0	-	31.7	28.7	-	85
92	59.5	51.3	45.3	38.7	35.1	33.3	33.7	30.2	28.0	29.7	26.9	25.6	92
98	55.6	47.6	42.5	36.2	33.1	31.5	31.5	28.4	26.7	27.6	25.4	24.0	98
105	52.1	44.9	40.3	34.1	31.3	30.0	29.7	26.9	25.4	25.9	24.0	22.9	105
112	48.7	42.1	38.1	32.0	29.5	28.4	27.8	25.4	24.3	24.3	22.5	21.6	112
118	45.9	39.7	36.3	30.3	28.2	27.1	26.2	24.3	23.1	22.8	21.2	20.5	118
125	43.0	37.3	34.4	28.7	26.7	26.0	24.7	22.9	22.0	21.4	20.1	19.4	125
131	40.6	35.3	32.7	27.3	25.6	24.9	23.5	21.8	20.9	20.2	19.0	18.5	131
144	36.0	31.7	29.7	24.8	23.4	22.7	21.2	19.8	19.2	18.0	17.0	16.8	144
158	32.3	28.8	26.9	22.5	21.4	21.2	19.2	18.1	17.6	16.1	15.4	15.2	158
171	29.3	26.1	24.5	20.5	19.6	19.5	17.4	16.5	16.3	14.4	13.9	13.7	171
184	26.8	23.9	22.5	18.7	18.1	18.1	15.8	15.2	15.1	12.9	12.6	12.5	184
197	-	21.6	20.7	17.3	16.8	-	14.6	14.0	14.0	11.8	11.4	11.5	197
210	-	-	19.3	15.9	15.5	-	13.4	12.9	-	10.6	10.4	10.6	210
223	-	-	17.8	14.6	14.3	-	12.3	11.9	-	9.7	9.5	9.7	223
236	-	-	-	13.4	-	-	11.2	11.1	-	8.8	8.7	-	236
249	-	-	-	-	-	-	10.4	10.4	-	8.0	7.9	-	249
263	-	-	-	-	-	-	9.6	-	-	7.4	7.4	-	263
276	-	-	-	-	-	-	-	-	-	6.7	-	-	276
289	-	-	-	-	-	-	-	-	-	-	-	-	289

Radius ft	145.7 ft 0°	145.7 ft 20°	145.7 ft 40°	165.4 ft 0°	165.4 ft 20°	165.4 ft 40°	185.0 ft 0°	185.0 ft 20°	185.0 ft 40°	204.7 ft 0°	204.7 ft 20°	204.7 ft 40°	Radius ft
	1,000 lb												
66	35.7	-	-	-	-	-	-	-	-	-	-	-	66
72	33.3	-	-	29.5	-	-	26.5	-	-	-	-	-	72
79	31.1	-	-	27.6	-	-	24.7	-	-	21.6	-	-	79
85	28.9	-	-	25.6	-	-	22.9	-	-	20.1	-	-	85
92	27.0	24.0	-	23.8	-	-	21.4	-	-	18.6	-	-	92
98	25.1	22.7	-	22.0	20.5	-	19.8	-	-	17.2	-	-	98
105	23.5	21.4	-	20.6	19.2	-	18.4	17.0	-	16.0	-	-	105
112	21.8	20.1	19.0	19.2	18.1	-	17.0	15.9	-	14.8	14.1	-	112
118	20.5	19.0	18.1	18.0	17.0	16.3	15.9	15.0	-	13.7	13.2	-	118
125	19.2	17.9	17.2	16.8	15.9	15.4	14.8	14.1	-	12.6	12.3	-	125
131	18.1	17.0	16.3	15.7	15.0	14.6	13.8	13.2	12.8	11.7	11.5	-	131
144	16.1	15.2	14.8	13.7	13.2	13.0	11.9	11.5	11.2	9.9	9.9	9.9	144
158	14.3	13.7	13.2	12.1	11.7	11.7	10.3	10.1	9.9	8.4	8.4	8.6	158
171	12.8	12.2	12.0	10.8	10.4	10.4	8.9	8.8	8.9	7.1	7.2	7.4	171
184	11.5	11.1	10.9	9.6	9.1	9.1	7.8	7.7	7.8	5.8	6.1	6.3	184
197	10.3	10.0	9.9	8.3	8.2	8.2	6.8	6.7	6.8	4.9	5.1	5.3	197
210	9.3	9.0	9.0	7.3	7.3	7.3	6.0	5.8	6.0	-	-	4.4	210
223	8.4	8.2	8.2	6.4	6.4	6.4	5.2	5.1	5.1	-	-	-	223
236	7.5	7.3	7.5	5.6	5.6	5.7	-	-	4.4	-	-	-	236
249	6.7	6.6	-	4.9	4.9	5.0	-	-	-	-	-	-	249
263	6.1	6.1	-	-	-	-	-	-	-	-	-	-	263
276	5.5	5.5	-	-	-	-	-	-	-	-	-	-	276
289	5.1	5.1	-	-	-	-	-	-	-	-	-	-	289
302	4.6	-	-	-	-	-	-	-	-	-	-	-	302
315	-	-	-	-	-	-	-	-	-	-	-	-	315

Remarks

Counterweight 88,200 lb 132,300 lb 176,400 lb 220,500 lb 264,600 lb 308,600 lb 352,700 lb

Max. capacities with minimum counterweight · Further counterweight configurations on request

LIFTING CAPACITIES FIXED FLY JIB WITH SSL

360° 85 %

169.9 ft Main boom

Radius ft	Fly jib 27.6 ft 0°	47.2 ft 0°	66.9 ft 0°	86.6 ft 0°	86.6 ft 20°	86.6 ft 40°	106.3 ft 0°	106.3 ft 20°	106.3 ft 40°	126.0 ft 0°	126.0 ft 20°	126.0 ft 40°	Radius ft
	1,000 lb												
33	179.5	-	-	-	-	-	-	-	-	-	-	-	33
39	166.0	145.9	126.8	73.9	-	-	-	-	-	-	-	-	39
46	153.4	134.5	116.0	97.0	-	-	80.7	-	-	-	-	-	46
53	141.5	124.1	106.5	89.7	-	-	75.0	-	-	66.1	-	-	53
59	130.7	114.6	97.9	83.1	63.3	-	70.1	-	-	61.9	-	-	59
66	120.8	106.0	90.4	77.4	59.5	51.1	65.5	47.4	-	58.0	-	-	66
72	115.1	98.3	83.8	72.1	56.0	48.7	61.3	45.0	-	54.5	40.8	-	72
79	109.7	91.6	78.3	67.6	52.9	46.5	57.7	42.5	-	51.3	38.8	-	79
85	104.3	86.9	72.8	63.1	50.0	44.5	54.0	40.3	35.3	48.1	36.6	31.7	85
92	99.4	82.3	68.9	59.4	47.4	42.5	51.0	38.4	34.0	45.3	34.8	30.4	92
98	94.6	77.8	65.3	55.8	45.2	40.8	48.1	36.4	32.8	42.5	32.8	29.3	98
105	88.8	74.0	61.9	52.8	43.0	39.2	45.6	34.6	31.5	40.3	31.3	28.2	105
112	83.1	70.1	58.6	49.8	41.0	37.5	43.2	32.8	30.4	38.1	29.8	26.9	112
118	76.8	66.8	55.8	47.3	39.2	36.2	41.1	31.3	29.1	36.2	28.2	26.0	118
125	70.5	63.5	52.9	44.8	37.5	34.6	39.0	29.8	28.0	34.2	26.9	24.9	125
131	65.4	60.6	50.5	42.7	36.2	33.5	37.3	28.4	26.9	32.6	25.6	23.8	131
144	55.9	55.2	46.2	38.7	33.3	31.1	34.0	25.8	24.7	29.7	23.4	22.0	144
158	48.0	49.1	42.7	35.1	30.6	28.9	31.0	23.8	22.7	27.0	21.2	20.3	158
171	41.2	42.3	39.7	31.9	28.4	27.1	28.3	22.3	20.9	24.7	19.6	18.7	171
184	32.6	36.4	37.3	28.9	26.7	25.4	25.8	20.7	19.6	22.5	18.1	17.2	184
197	-	30.0	34.4	27.6	24.9	-	23.6	19.6	18.5	20.7	16.8	15.9	197
210	-	-	30.2	26.1	23.4	-	21.5	18.7	-	19.0	15.4	14.8	210
223	-	-	23.4	24.5	21.8	-	20.1	17.9	-	17.4	14.6	-	223
236	-	-	-	20.6	-	-	19.1	17.0	-	15.8	13.4	-	236
249	-	-	-	-	-	-	17.9	16.3	-	14.6	12.3	-	249
263	-	-	-	-	-	-	13.9	-	-	13.7	11.5	-	263
276	-	-	-	-	-	-	-	-	-	12.0	-	-	276

ft	145.7 ft			165.4 ft			185.0 ft			204.7 ft			ft
	1,000 lb												
53	40.8	-	-	-	-	-	-	-	-	-	-	-	53
59	54.2	-	-	47.6	-	-	-	-	-	-	-	-	59
66	50.9	-	-	45.0	-	-	28.9	-	-	23.4	-	-	66
72	47.8	-	-	42.8	-	-	39.0	-	-	22.9	-	-	72
79	45.1	-	-	40.5	-	-	36.5	-	-	32.6	-	-	79
85	42.3	29.8	-	38.1	28.0	-	34.2	-	-	30.4	-	-	85
92	40.0	28.7	-	36.2	26.5	-	32.1	-	-	28.5	-	-	92
98	37.7	27.3	-	34.2	25.1	-	30.0	-	-	26.7	-	-	98
105	35.6	26.2	22.7	32.3	23.8	20.9	28.2	21.4	-	25.0	17.9	-	105
112	33.5	25.1	21.8	30.4	22.5	20.1	26.5	20.3	-	23.4	17.0	-	112
118	31.9	24.0	21.2	28.8	21.4	19.2	24.9	19.2	-	21.9	16.3	-	118
125	30.2	22.9	20.3	27.1	20.3	18.3	23.4	18.1	16.3	20.5	15.4	-	125
131	28.7	21.8	19.6	25.6	19.2	17.4	22.0	17.2	15.7	19.3	14.8	13.9	131
144	25.9	19.8	18.3	22.8	17.2	15.9	19.6	15.4	14.1	17.0	13.2	12.6	144
158	23.5	18.1	17.0	20.4	15.7	14.6	17.6	13.7	12.8	15.1	11.7	11.2	158
171	21.3	16.5	15.9	18.2	14.1	13.2	16.0	12.3	11.5	13.6	10.4	9.9	171
184	19.4	15.2	14.8	16.5	12.8	12.1	14.6	11.0	10.4	12.1	9.0	8.6	184
197	17.7	14.1	13.7	14.9	11.7	11.2	13.2	9.7	9.3	10.8	7.7	7.3	197
210	16.2	13.0	12.8	13.6	10.6	10.4	12.0	8.6	8.2	9.6	6.4	6.0	210
223	14.8	12.1	11.9	12.3	9.7	9.5	10.8	7.5	7.1	8.6	5.1	4.6	223
236	13.6	11.5	11.0	11.4	9.0	8.8	9.9	6.6	6.2	7.7	-	-	236
249	12.3	10.8	-	10.4	8.2	8.2	9.0	5.5	5.1	6.8	-	-	249
263	11.2	10.1	-	9.5	7.5	-	8.2	4.6	-	6.0	-	-	263
276	10.3	9.5	-	8.6	6.8	-	7.3	-	-	5.3	-	-	276
289	9.6	-	-	7.7	6.0	-	6.6	-	-	4.6	-	-	289
302	-	-	-	6.8	5.1	-	5.7	-	-	-	-	-	302
315	-	-	-	5.7	-	-	5.0	-	-	-	-	-	315

Remarks: see page 22

Counterweight	176,400 lb	220,500 lb	264,600 lb	308,600 lb	352,700 lb	396,800 lb

LIFTING CAPACITIES FIXED FLY JIB

360° 85 %

139.4 ft Main boom

Radius ft	Fly jib 27.6 ft 0°	47.2 ft 0°	66.9 ft 0°	86.6 ft 0°	86.6 ft 20°	86.6 ft 40°	106.3 ft 0°	106.3 ft 20°	106.3 ft 40°	126.0 ft 0°	126.0 ft 20°	126.0 ft 40°	Radius ft
	1,000 lb												
33	172.6	-	-	-	-	-	-	-	-	-	-	-	33
39	152.3	137.8	107.6	-	-	-	-	-	-	-	-	-	39
46	135.1	122.4	101.0	97.0	-	-	-	-	-	-	-	-	46
53	121.0	109.6	94.6	88.6	-	-	76.7	-	-	67.0	-	-	53
59	109.1	98.5	88.2	81.1	68.3	-	72.1	-	-	63.1	-	-	59
66	99.2	89.3	82.2	74.5	65.3	56.7	67.5	50.3	-	59.5	-	-	66
72	91.1	81.6	76.5	68.6	62.2	54.7	63.1	47.8	-	56.0	46.3	-	72
79	84.4	75.5	71.2	63.6	59.1	52.7	59.1	45.6	39.5	52.8	43.9	-	79
85	77.8	69.4	65.9	58.6	55.8	50.9	55.1	43.7	38.1	49.6	41.7	38.1	85
92	72.6	64.8	61.3	54.8	52.9	48.7	51.5	41.7	37.0	46.6	39.7	36.6	92
98	67.5	60.2	56.7	50.9	49.8	46.7	47.8	39.7	35.7	43.7	37.7	35.3	98
105	63.2	56.3	53.0	47.8	47.0	44.8	44.8	37.9	34.6	41.1	35.9	34.0	105
112	58.9	52.5	49.4	44.8	44.1	42.8	41.7	36.2	33.3	38.6	34.4	32.6	112
118	55.4	49.3	46.4	42.1	41.7	40.8	39.0	34.6	32.2	36.3	32.8	31.5	118
125	52.0	46.1	43.4	39.5	39.2	38.8	36.4	33.1	31.1	34.0	31.5	30.4	125
131	49.1	43.5	41.2	37.3	37.0	36.8	34.3	31.5	30.0	32.1	30.2	29.3	131
144	43.4	39.0	37.3	33.2	33.1	33.3	30.4	28.7	27.8	28.5	27.6	27.1	144
158	37.9	35.3	34.0	29.8	29.8	30.0	27.3	26.0	25.6	25.4	25.1	25.1	158
171	-	32.1	31.2	27.0	26.8	-	24.7	23.6	23.6	22.8	22.8	22.9	171
184	-	-	28.7	24.6	24.0	-	22.7	21.5	21.6	20.5	20.5	20.7	184
197	-	-	-	22.5	21.4	-	20.9	19.6	-	18.5	18.4	18.4	197
210	-	-	-	20.7	-	-	19.2	18.1	-	16.9	16.5	-	210
223	-	-	-	-	-	-	17.6	16.8	-	15.4	14.8	-	223
236	-	-	-	-	-	-	-	-	-	14.0	13.5	-	236
249	-	-	-	-	-	-	-	-	-	12.6	-	-	249

Radius ft	145.7 ft			165.4 ft			185.0 ft			204.7 ft			Radius ft
	1,000 lb												
59	55.8	-	-	48.1	-	-	-	-	-	-	-	-	59
66	52.2	-	-	44.8	-	-	39.7	-	-	-	-	-	66
72	48.9	-	-	41.9	-	-	37.0	-	-	32.2	-	-	72
79	46.1	-	-	39.2	-	-	34.7	-	-	30.1	-	-	79
85	43.2	33.7	-	36.6	31.3	-	32.4	-	-	28.0	-	-	85
92	40.7	32.6	-	34.4	29.8	-	30.4	-	-	26.1	-	-	92
98	38.1	31.3	26.5	32.2	28.4	-	28.4	23.8	-	24.3	-	-	98
105	36.0	30.2	26.2	30.5	27.3	25.8	26.8	22.7	-	22.7	21.2	-	105
112	34.0	29.3	26.0	28.9	26.0	24.7	25.1	21.8	-	21.2	20.1	-	112
118	32.1	28.2	25.6	27.3	24.9	23.6	23.8	20.9	-	20.0	19.2	-	118
125	30.2	27.3	25.1	25.8	23.8	22.5	22.5	20.1	19.4	18.7	18.1	16.8	125
131	28.7	26.2	24.5	24.7	22.9	21.6	21.3	19.4	18.5	17.6	17.2	16.3	131
144	25.7	24.5	23.4	22.5	20.9	19.8	19.1	17.9	17.0	15.5	15.7	15.2	144
158	23.1	22.7	21.8	20.5	19.4	18.1	17.2	16.3	15.7	13.9	14.1	14.1	158
171	20.7	20.7	20.3	18.7	17.7	16.6	15.5	15.0	14.3	12.6	12.8	12.9	171
184	18.7	19.0	18.7	17.0	16.2	15.2	14.0	13.7	13.2	11.4	11.6	11.9	184
197	17.0	17.2	17.0	15.3	14.7	14.0	12.6	12.5	12.0	10.3	10.6	10.7	197
210	15.2	15.4	15.5	13.7	13.2	12.8	11.3	11.2	10.9	9.3	9.6	9.6	210
223	13.7	13.7	-	12.2	11.7	11.6	10.1	9.9	9.8	8.4	8.6	8.5	223
236	12.2	12.1	-	10.7	10.4	-	9.0	8.7	8.8	7.5	7.7	7.2	236
249	10.9	10.8	-	9.2	9.1	-	7.6	7.6	7.9	6.5	6.7	6.0	249
263	9.5	-	-	7.8	7.9	-	6.4	6.6	-	5.2	5.5	4.9	263
276	-	-	-	6.2	7.1	-	5.1	5.7	-	-	-	-	276
289	-	-	-	4.8	-	-	-	-	-	-	-	-	289
302	-	-	-	-	-	-	-	-	-	-	-	-	302

Remarks

Counterweight	88,200 lb	132,300 lb	176,400 lb	220,500 lb	264,600 lb	308,600 lb	352,700 lb

Max. capacities with minimum counterweight
Further counterweight configurations on request

WORKING RANGES LUFFING FLY JIB, MAIN BOOM 83° TO 65° WITH / WITHOUT SSL

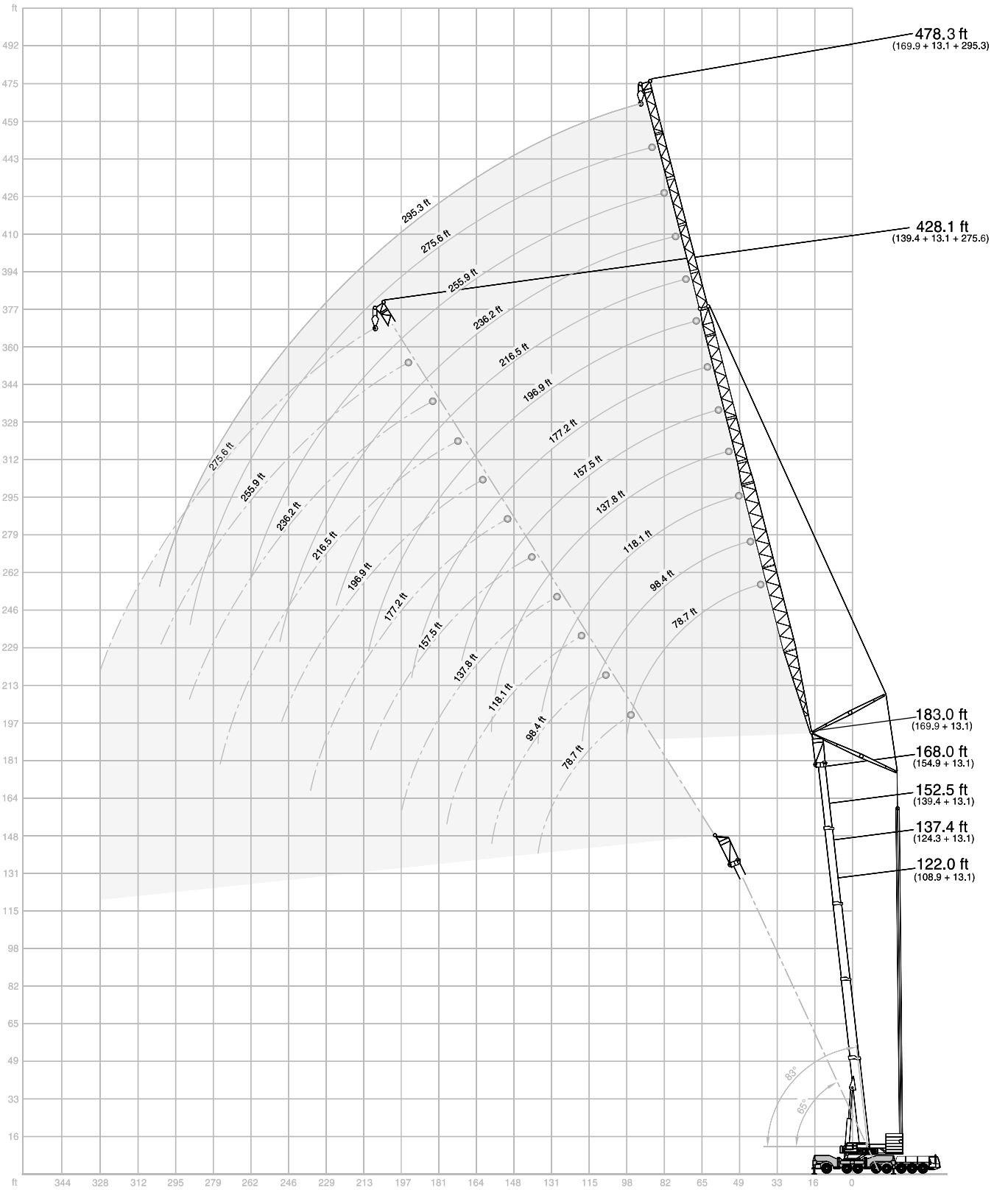

LIFTING CAPACITIES LUFFING FLY JIB, MAIN BOOM 83° TO 65°

360° 85 %

48.2 ft + 13.1 ft Main boom + adapter

Fly jib

Radius	78.7 ft 83°	78.7 ft 73°	78.7 ft 65°	98.4 ft 83°	98.4 ft 73°	98.4 ft 65°	118.1 ft 83°	118.1 ft 73°	118.1 ft 65°	137.8 ft 83°	137.8 ft 73°	137.8 ft 65°	157.5 ft 83°	157.5 ft 73°	157.5 ft 65°	177.2 ft 83°	177.2 ft 73°	177.2 ft 65°	Radius
ft									1,000 lb										ft
46	257.9	-	-	224.9	-	-	-	-	-	-	-	-	-	-	-	-	-	-	46
53	235.9	-	-	216.1	-	-	188.5	-	-	151.5	-	-	-	-	-	-	-	-	53
59	213.4	-	-	206.1	-	-	185.2	-	-	151.5	-	-	119.9	-	-	-	-	-	59
66	191.8	-	-	190.7	-	-	181.9	-	-	151.5	-	-	119.9	-	-	108.0	-	-	66
72	173.7	167.1	-	172.8	165.8	-	171.1	-	-	151.5	-	-	119.9	-	-	108.0	-	-	72
79	158.7	152.6	-	157.6	151.5	-	155.9	149.5	-	149.3	-	-	119.9	-	-	108.0	-	-	79
85	119.0	140.2	135.8	144.8	139.1	-	143.3	137.1	-	141.5	-	-	119.5	-	-	108.0	-	-	85
92	-	129.6	125.7	134.0	128.5	124.3	132.3	126.5	-	130.5	124.8	-	114.9	-	-	108.0	-	-	92
98	-	-	116.8	116.8	119.3	115.5	122.8	117.5	-	121.0	115.7	-	110.2	113.3	-	106.9	-	-	98
105	-	-	-	-	111.3	107.6	114.4	109.3	105.6	112.7	107.6	-	105.6	108.9	-	105.2	104.5	-	105
112	-	-	-	-	104.3	100.8	100.1	102.3	98.8	105.4	100.5	-	101.0	101.6	-	103.4	100.1	-	112
118	-	-	-	-	-	94.8	83.1	96.1	92.6	98.8	94.1	90.8	95.9	95.5	-	98.5	93.7	-	118
125	-	-	-	-	-	-	-	90.4	87.3	90.8	88.6	85.3	91.1	89.7	86.4	92.6	88.2	-	125
131	-	-	-	-	-	-	-	85.5	82.2	78.7	83.6	80.5	86.0	84.7	81.4	87.3	83.1	-	131
138	-	-	-	-	-	-	-	-	77.8	65.9	78.9	75.8	80.9	80.0	76.9	82.5	78.5	75.4	138
144	-	-	-	-	-	-	-	-	-	-	74.7	71.9	74.7	75.8	73.0	78.0	74.3	71.2	144
151	-	-	-	-	-	-	-	-	-	-	70.8	68.1	65.5	71.9	69.2	74.1	70.3	67.5	151
158	-	-	-	-	-	-	-	-	-	-	-	64.6	55.3	67.9	65.5	68.6	66.8	64.2	158
164	-	-	-	-	-	-	-	-	-	-	-	-	-	64.6	62.2	61.1	63.3	60.8	164
177	-	-	-	-	-	-	-	-	-	-	-	-	-	-	56.2	45.4	57.3	54.9	177
190	-	-	-	-	-	-	-	-	-	-	-	-	-	-	-	-	-	50.0	190

	196.9 ft			216.5 ft			236.2 ft			255.9 ft			275.6 ft			295.3 ft			
ft									1,000 lb										ft
72	92.6	-	-	-	-	-	-	-	-	-	-	-	-	-	-	-	-	-	72
79	92.6	-	-	74.1	-	-	62.8	-	-	-	-	-	-	-	-	-	-	-	79
85	92.6	-	-	73.6	-	-	62.6	-	-	52.5	-	-	-	-	-	-	-	-	85
92	92.6	-	-	73.2	-	-	62.4	-	-	51.8	-	-	41.7	-	-	-	-	-	92
98	92.6	-	-	72.5	-	-	61.9	-	-	51.4	-	-	41.2	-	-	34.2	-	-	98
105	91.7	-	-	72.1	-	-	61.7	-	-	50.9	-	-	40.6	-	-	33.5	-	-	105
112	90.8	-	-	71.7	-	-	61.5	-	-	50.5	-	-	39.9	-	-	33.1	-	-	112
118	89.5	84.9	-	71.0	-	-	61.1	-	-	49.8	-	-	39.2	-	-	32.4	-	-	118
125	88.4	84.9	-	70.1	68.3	-	60.8	-	-	49.4	-	-	38.8	-	-	31.7	-	-	125
131	86.6	82.2	-	69.4	67.9	-	60.2	-	-	48.7	-	-	38.1	-	-	31.3	-	-	131
138	81.8	77.6	-	68.8	67.5	-	59.5	61.3	-	48.1	-	-	37.5	-	-	30.6	-	-	138
144	77.4	73.4	-	68.1	67.2	-	59.1	60.6	-	47.4	49.2	-	36.8	-	-	30.0	-	-	144
151	73.4	69.7	66.8	67.2	66.8	-	58.4	60.0	-	46.5	48.5	-	36.2	37.9	-	29.5	-	-	151
158	69.7	66.1	63.5	65.7	64.4	61.5	58.0	59.3	-	45.9	47.8	-	35.5	37.0	-	28.9	-	-	158
164	66.1	62.8	60.2	63.9	61.1	58.4	57.3	58.6	-	45.0	47.2	-	34.6	36.4	-	28.2	29.5	-	164
177	57.1	56.7	54.2	58.2	55.1	52.7	55.6	53.6	50.9	43.4	45.6	-	33.3	34.6	-	27.1	28.2	-	177
190	45.0	51.6	49.4	51.6	50.0	47.8	51.6	48.5	46.3	41.9	44.3	44.5	32.0	32.8	-	26.0	27.1	-	190
203	-	47.2	45.0	41.9	45.4	43.4	46.3	44.1	41.9	40.1	43.0	41.7	30.6	31.3	32.4	24.9	25.8	26.9	203
217	-	-	41.4	30.9	41.7	39.7	38.1	40.1	38.1	38.4	39.9	37.9	29.3	30.2	31.1	24.0	24.7	25.8	217
230	-	-	-	-	-	36.4	29.5	36.8	35.1	35.5	36.6	34.6	28.2	29.1	29.8	23.1	23.8	24.7	230
243	-	-	-	-	-	-	-	34.0	32.2	28.9	33.5	31.7	27.1	28.0	28.7	22.0	22.9	23.8	243
256	-	-	-	-	-	-	-	-	-	-	30.9	29.1	26.2	27.1	27.6	21.2	21.8	22.7	256
269	-	-	-	-	-	-	-	-	-	-	-	26.7	20.9	26.5	26.5	20.5	21.2	21.8	269
282	-	-	-	-	-	-	-	-	-	-	-	-	-	24.9	24.3	19.6	20.5	21.2	282
295	-	-	-	-	-	-	-	-	-	-	-	-	-	-	-	-	20.1	20.5	295
308	-	-	-	-	-	-	-	-	-	-	-	-	-	-	-	-	-	19.6	308
322	-	-	-	-	-	-	-	-	-	-	-	-	-	-	-	-	-	-	322

Remarks

Counterweight 132,300 lb 176,400 lb 220,500 lb 264,600 lb 308,600 lb 352,700 lb 396,800 lb

Max. capacities with minimum counterweight

Further counterweight configurations on request

LIFTING CAPACITIES LUFFING FLY JIB, MAIN BOOM 83° TO 65°

360° 85 %

63.3 ft + 13.1 ft Main boom + adapter

Fly jib

Radius	78.7 ft 83°	78.7 ft 73°	78.7 ft 65°	98.4 ft 83°	98.4 ft 73°	98.4 ft 65°	118.1 ft 83°	118.1 ft 73°	118.1 ft 65°	137.8 ft 83°	137.8 ft 73°	137.8 ft 65°	157.5 ft 83°	157.5 ft 73°	157.5 ft 65°	177.2 ft 83°	177.2 ft 73°	177.2 ft 65°	Radius
ft									1,000 lb										ft
46	244.7	-	-	213.4	-	-	-	-	-	-	-	-	-	-	-	-	-	-	46
53	229.3	-	-	203.9	-	-	172.6	-	-	-	-	-	-	-	-	-	-	-	53
59	211.6	-	-	194.4	-	-	171.3	-	-	139.6	-	-	-	-	-	-	-	-	59
66	189.8	-	-	185.0	-	-	170.0	-	-	139.6	-	-	114.6	-	-	102.5	-	-	66
72	172.0	163.4	-	170.9	-	-	167.3	-	-	139.6	-	-	114.6	-	-	102.1	-	-	72
79	157.2	149.0	-	156.1	147.7	-	154.3	-	-	139.6	-	-	114.6	-	-	101.6	-	-	79
85	143.1	136.9	-	143.3	135.8	-	141.8	133.8	-	134.9	-	-	114.6	-	-	101.2	-	-	85
92	-	126.5	121.3	132.5	125.4	-	130.7	123.5	-	129.2	-	-	112.4	-	-	100.8	-	-	92
98	-	117.7	112.7	123.0	116.4	111.3	121.3	114.4	-	119.7	112.7	-	108.9	-	-	100.3	-	-	98
105	-	-	105.2	100.5	108.5	103.8	113.1	106.7	-	111.3	104.7	-	105.6	106.0	-	99.6	-	-	105
112	-	-	-	-	101.6	97.0	105.8	99.6	95.0	104.1	97.9	-	102.3	99.0	-	99.2	97.4	-	112
118	-	-	-	-	95.5	91.3	92.2	93.5	89.1	97.7	91.7	-	97.7	92.8	-	97.4	91.3	-	118
125	-	-	-	-	-	86.0	71.2	88.0	83.8	91.7	86.2	81.8	93.0	87.3	-	91.5	85.8	-	125
131	-	-	-	-	-	-	-	83.1	79.1	86.0	81.1	77.2	87.7	82.5	-	86.2	80.7	-	131
138	-	-	-	-	-	-	-	78.7	74.7	73.2	76.7	72.8	82.9	77.8	73.9	81.6	76.3	-	138
144	-	-	-	-	-	-	-	-	71.0	57.1	72.5	69.0	78.0	73.6	69.9	77.2	72.1	68.1	144
151	-	-	-	-	-	-	-	-	-	-	69.0	65.3	71.7	69.9	66.4	73.2	68.3	64.6	151
158	-	-	-	-	-	-	-	-	-	-	65.3	61.9	61.5	66.1	62.8	69.2	64.8	61.3	158
164	-	-	-	-	-	-	-	-	-	-	-	58.6	-	62.8	59.5	65.7	61.5	58.2	164
177	-	-	-	-	-	-	-	-	-	-	-	-	-	-	54.0	50.0	55.6	52.5	177
190	-	-	-	-	-	-	-	-	-	-	-	-	-	-	-	-	50.5	47.8	190
203	-	-	-	-	-	-	-	-	-	-	-	-	-	-	-	-	-	43.7	203
217	-	-	-	-	-	-	-	-	-	-	-	-	-	-	-	-	-	-	217

ft	196.9 ft			216.5 ft			236.2 ft			255.9 ft			275.6 ft			295.3 ft			ft
									1,000 lb										
72	86.6	-	-	-	-	-	-	-	-	-	-	-	-	-	-	-	-	-	72
79	86.4	-	-	69.0	-	-	-	-	-	-	-	-	-	-	-	-	-	-	79
85	86.2	-	-	68.6	-	-	60.8	-	-	-	-	-	-	-	-	-	-	-	85
92	85.8	-	-	68.1	-	-	60.6	-	-	47.8	-	-	-	-	-	-	-	-	92
98	85.5	-	-	67.7	-	-	60.4	-	-	47.8	-	-	39.0	-	-	-	-	-	98
105	85.1	-	-	67.0	-	-	60.2	-	-	47.6	-	-	38.6	-	-	31.7	-	-	105
112	84.7	-	-	66.6	-	-	60.0	-	-	47.4	-	-	38.1	-	-	31.3	-	-	112
118	84.0	-	-	66.1	-	-	59.5	-	-	47.4	-	-	37.7	-	-	30.9	-	-	118
125	83.3	80.0	-	65.9	-	-	59.3	-	-	47.2	-	-	37.0	-	-	30.4	-	-	125
131	82.7	80.0	-	65.5	65.5	-	58.9	-	-	46.7	-	-	36.6	-	-	29.8	-	-	131
138	80.9	75.4	-	65.0	64.8	-	58.4	60.2	-	46.5	-	-	36.2	-	-	29.3	-	-	138
144	76.5	71.4	-	64.6	64.2	-	57.8	59.5	-	45.9	-	-	35.5	-	-	28.9	-	-	144
151	72.5	67.7	-	64.2	63.7	-	57.3	59.1	-	45.4	47.0	-	35.1	-	-	28.4	-	-	151
158	68.8	64.2	60.6	63.3	62.4	-	56.9	58.6	-	44.8	46.3	-	34.4	35.7	-	27.8	-	-	158
164	65.3	60.8	57.5	62.4	59.1	-	56.4	57.3	-	44.3	45.9	-	33.7	35.1	-	27.3	28.4	-	164
177	58.9	54.9	52.0	57.5	53.6	50.3	55.3	51.8	-	43.2	45.0	-	32.6	34.0	-	26.5	27.3	-	177
190	48.9	49.8	47.2	52.0	48.3	45.6	50.7	47.0	43.9	41.7	44.1	43.2	31.5	32.8	-	25.6	26.5	-	190
203	-	45.6	43.0	45.2	44.1	41.4	46.1	42.5	39.7	40.1	42.3	39.5	30.4	31.5	32.8	24.5	25.4	-	203
217	-	-	39.5	34.4	40.3	37.7	41.0	38.8	36.2	38.4	38.6	35.7	29.3	30.4	31.5	23.6	24.3	25.4	217
230	-	-	-	-	37.0	34.6	32.4	35.5	33.1	36.4	35.3	32.6	28.2	29.3	30.2	22.7	23.6	24.3	230
243	-	-	-	-	-	32.0	-	32.6	30.2	31.5	32.2	29.8	27.1	28.2	29.1	21.8	22.7	23.4	243
256	-	-	-	-	-	-	-	-	27.6	23.4	29.8	27.1	26.5	27.3	26.9	20.9	22.0	22.5	256
269	-	-	-	-	-	-	-	-	-	-	27.3	24.9	23.4	26.5	24.5	20.3	21.2	21.8	269
282	-	-	-	-	-	-	-	-	-	-	-	22.7	-	24.7	22.5	19.6	20.7	21.2	282
295	-	-	-	-	-	-	-	-	-	-	-	-	-	-	20.5	15.9	20.3	19.6	295
308	-	-	-	-	-	-	-	-	-	-	-	-	-	-	-	-	19.8	18.1	308
322	-	-	-	-	-	-	-	-	-	-	-	-	-	-	-	-	-	-	322

Remarks

Counterweight 132,300 lb 176,400 lb 220,500 lb 264,600 lb 308,600 lb 352,700 lb 396,800 lb

Max. capacities with minimum counterweight

Further counterweight configurations on request

LIFTING CAPACITIES LUFFING FLY JIB, MAIN BOOM 83° TO 65°

360° 85 %

78.7 ft + 13.1 ft Main boom + adapter

Fly jib

Radius	78.7 ft 83°	78.7 ft 73°	78.7 ft 65°	98.4 ft 83°	98.4 ft 73°	98.4 ft 65°	118.1 ft 83°	118.1 ft 73°	118.1 ft 65°	137.8 ft 83°	137.8 ft 73°	137.8 ft 65°	157.5 ft 83°	157.5 ft 73°	157.5 ft 65°	177.2 ft 83°	177.2 ft 73°	177.2 ft 65°	Radius
ft									1,000 lb										ft
53	217.8	-	-	192.2	-	-	159.8	-	-	-	-	-	-	-	-	-	-	-	53
59	203.7	-	-	183.4	-	-	158.3	-	-	130.7	-	-	-	-	-	-	-	-	59
66	188.3	-	-	174.6	-	-	156.7	-	-	130.7	-	-	109.8	-	-	-	-	-	66
72	170.4	-	-	166.0	-	-	155.2	-	-	130.7	-	-	109.8	-	-	96.8	-	-	72
79	155.6	145.9	-	154.5	-	-	150.1	-	-	130.7	-	-	109.8	-	-	96.3	-	-	79
85	143.1	134.0	-	142.0	132.9	-	140.2	-	-	129.4	-	-	109.8	-	-	95.7	-	-	85
92	-	123.9	-	131.2	122.6	-	129.4	120.8	-	125.2	-	-	109.6	-	-	95.2	-	-	92
98	-	115.1	109.1	121.9	113.8	-	120.2	112.0	-	118.4	-	-	107.1	-	-	94.6	-	-	98
105	-	-	101.6	113.1	106.0	100.3	112.0	104.1	-	110.2	102.3	-	104.5	-	-	94.1	-	-	105
112	-	-	95.2	-	99.2	93.9	104.7	97.4	-	103.0	95.5	-	102.1	96.8	-	93.7	-	-	112
118	-	-	-	-	93.3	88.0	98.3	91.3	86.0	96.6	89.5	-	97.9	90.6	-	93.0	87.7	-	118
125	-	-	-	-	-	82.9	80.2	85.8	80.9	90.8	84.0	-	92.2	85.3	-	90.6	83.6	-	125
131	-	-	-	-	-	78.3	-	80.9	76.3	85.5	79.1	74.3	86.9	80.2	-	85.3	78.7	-	131
138	-	-	-	-	-	-	-	76.7	72.1	78.9	74.7	70.1	82.2	75.8	-	80.7	74.3	-	138
144	-	-	-	-	-	-	-	-	68.3	64.4	70.8	66.4	77.8	71.9	67.5	76.3	70.1	-	144
151	-	-	-	-	-	-	-	-	64.6	-	67.0	62.8	73.6	68.1	63.9	72.3	66.6	62.2	151
158	-	-	-	-	-	-	-	-	-	-	63.5	59.5	66.1	64.6	60.6	68.6	63.3	58.9	158
164	-	-	-	-	-	-	-	-	-	-	-	56.4	54.5	61.3	57.3	65.0	60.0	56.0	164
177	-	-	-	-	-	-	-	-	-	-	-	-	-	55.3	51.8	54.0	54.0	50.5	177
190	-	-	-	-	-	-	-	-	-	-	-	-	-	-	47.2	-	49.2	45.9	190
203	-	-	-	-	-	-	-	-	-	-	-	-	-	-	-	-	-	41.9	203

ft	196.9 ft			216.5 ft			236.2 ft			255.9 ft			275.6 ft			295.3 ft			ft
									1,000 lb										
79	82.0	-	-	-	-	-	-	-	-	-	-	-	-	-	-	-	-	-	79
85	81.4	-	-	63.9	-	-	57.3	-	-	-	-	-	-	-	-	-	-	-	85
92	80.9	-	-	63.5	-	-	56.9	-	-	46.3	-	-	-	-	-	-	-	-	92
98	80.5	-	-	63.3	-	-	56.7	-	-	46.3	-	-	36.6	-	-	-	-	-	98
105	80.0	-	-	62.8	-	-	56.4	-	-	46.1	-	-	36.2	-	-	31.1	-	-	105
112	79.6	-	-	62.4	-	-	56.2	-	-	45.9	-	-	35.9	-	-	30.6	-	-	112
118	79.1	-	-	61.9	-	-	56.0	-	-	45.6	-	-	35.7	-	-	30.2	-	-	118
125	78.7	-	-	61.5	-	-	55.8	-	-	45.4	-	-	35.5	-	-	29.8	-	-	125
131	78.3	75.8	-	61.3	-	-	55.3	-	-	45.2	-	-	35.3	-	-	29.3	-	-	131
138	77.8	73.4	-	60.8	61.5	-	55.1	-	-	45.2	-	-	35.1	-	-	28.9	-	-	138
144	75.6	69.4	-	60.4	60.8	-	54.9	52.9	-	44.8	-	-	34.6	-	-	28.2	-	-	144
151	71.7	65.7	-	60.0	60.4	-	54.5	52.5	-	44.3	-	-	34.2	-	-	27.8	-	-	151
158	68.1	62.4	-	59.5	60.0	-	54.2	52.2	-	43.9	44.1	-	33.7	-	-	27.3	-	-	158
164	64.6	59.3	55.1	59.1	57.5	-	54.0	51.8	-	43.4	43.9	-	33.1	34.4	-	26.9	-	-	164
177	58.2	53.6	49.8	56.9	52.0	48.1	53.4	50.0	-	42.8	43.2	-	32.2	33.5	-	26.0	27.1	-	177
190	52.9	48.5	45.2	51.6	47.0	43.4	50.0	45.4	41.7	41.7	42.8	-	31.1	32.6	-	24.9	26.2	-	190
203	38.4	44.3	41.2	47.0	42.8	39.5	45.6	41.2	37.7	40.1	41.0	37.3	30.2	31.5	-	24.0	25.1	-	203
217	-	40.8	37.7	37.3	39.0	35.9	41.7	37.5	34.2	38.6	37.3	33.7	29.1	30.6	31.7	23.1	24.3	-	217
230	-	-	34.8	-	35.9	33.1	35.9	34.4	31.1	37.0	34.0	30.9	28.2	29.5	30.4	22.5	23.4	24.5	230
243	-	-	-	-	-	30.2	-	31.5	28.4	33.7	31.1	28.0	27.1	28.7	27.6	21.8	22.7	23.6	243
256	-	-	-	-	-	-	-	28.9	25.8	25.8	28.4	25.4	26.5	27.6	25.1	20.9	22.0	22.7	256
269	-	-	-	-	-	-	-	-	23.8	-	26.0	23.1	25.4	25.8	22.9	20.3	21.4	22.0	269
282	-	-	-	-	-	-	-	-	-	-	-	21.2	-	23.6	20.7	19.8	20.7	19.8	282
295	-	-	-	-	-	-	-	-	-	-	-	-	-	21.8	19.0	17.6	20.3	18.1	295
308	-	-	-	-	-	-	-	-	-	-	-	-	-	-	17.4	-	19.2	16.5	308
322	-	-	-	-	-	-	-	-	-	-	-	-	-	-	-	-	-	15.0	322
335	-	-	-	-	-	-	-	-	-	-	-	-	-	-	-	-	-	-	335

Remarks

Counterweight	132,300 lb	176,400 lb	220,500 lb	264,600 lb	308,600 lb	352,700 lb	396,800 lb

Max. capacities with minimum counterweight

Further counterweight configurations on request

LIFTING CAPACITIES LUFFING FLY JIB, MAIN BOOM 83° TO 65°

360° 85 %

93.8 ft + 13.1 ft Main boom + adapter

Fly jib

Radius	78.7 ft 83°	78.7 ft 73°	78.7 ft 65°	98.4 ft 83°	98.4 ft 73°	98.4 ft 65°	118.1 ft 83°	118.1 ft 73°	118.1 ft 65°	137.8 ft 83°	137.8 ft 73°	137.8 ft 65°	157.5 ft 83°	157.5 ft 73°	157.5 ft 65°	177.2 ft 83°	177.2 ft 73°	177.2 ft 65°	Radius
ft									1,000 lb										ft
53	188.7	-	-	166.0	-	-	-	-	-	-	-	-	-	-	-	-	-	-	53
59	178.1	-	-	160.1	-	-	139.3	-	-	-	-	-	-	-	-	-	-	-	59
66	168.4	-	-	154.1	-	-	137.1	-	-	115.5	-	-	98.3	-	-	-	-	-	66
72	159.0	-	-	147.7	-	-	134.7	-	-	114.9	-	-	98.1	-	-	86.6	-	-	72
79	151.2	-	-	141.3	-	-	131.8	-	-	114.2	-	-	97.9	-	-	86.0	-	-	79
85	142.0	124.3	-	134.9	-	-	127.0	-	-	113.3	-	-	97.7	-	-	85.5	-	-	85
92	-	116.0	-	130.1	114.0	-	122.4	-	-	110.2	-	-	97.4	-	-	84.9	-	-	92
98	-	109.3	-	121.0	106.9	-	117.7	101.9	-	106.9	-	-	96.3	-	-	84.2	-	-	98
105	-	105.2	95.5	112.9	101.4	-	111.1	96.6	-	103.8	93.7	-	94.8	-	-	83.8	-	-	105
112	-	-	89.7	-	95.9	88.6	103.8	91.5	-	100.5	89.3	-	93.0	-	-	83.1	-	-	112
118	-	-	85.5	-	91.5	83.8	97.4	87.5	-	95.7	84.9	-	91.5	84.7	-	82.7	-	-	118
125	-	-	-	-	86.2	78.9	87.7	83.8	75.4	89.9	80.5	-	89.7	81.1	-	82.0	76.9	-	125
131	-	-	-	-	-	75.6	-	79.4	71.9	84.9	77.2	-	86.2	77.4	-	81.4	73.9	-	131
138	-	-	-	-	-	72.1	-	75.2	68.3	80.2	73.2	67.0	81.4	73.9	-	79.8	71.0	-	138
144	-	-	-	-	-	-	-	71.2	65.7	70.1	69.2	63.9	77.2	70.3	-	75.6	67.9	-	144
151	-	-	-	-	-	-	-	-	62.8	-	65.7	60.6	73.0	66.8	61.9	71.7	64.8	-	151
158	-	-	-	-	-	-	-	-	59.5	-	62.2	57.8	69.2	63.3	58.9	67.9	61.7	-	158
164	-	-	-	-	-	-	-	-	-	-	59.1	54.7	59.3	60.0	55.8	64.4	58.6	54.0	164
177	-	-	-	-	-	-	-	-	-	-	-	49.4	-	54.2	50.3	58.2	52.9	48.7	177
190	-	-	-	-	-	-	-	-	-	-	-	-	-	-	45.6	-	48.1	44.3	190
203	-	-	-	-	-	-	-	-	-	-	-	-	-	-	-	-	43.9	40.3	203
217	-	-	-	-	-	-	-	-	-	-	-	-	-	-	-	-	-	37.0	217
230	-	-	-	-	-	-	-	-	-	-	-	-	-	-	-	-	-	-	230

ft	196.9 ft 83°	196.9 ft 73°	196.9 ft 65°	216.5 ft 83°	216.5 ft 73°	216.5 ft 65°	236.2 ft 83°	236.2 ft 73°	236.2 ft 65°	255.9 ft 83°	255.9 ft 73°	255.9 ft 65°	275.6 ft 83°	275.6 ft 73°	275.6 ft 65°	295.3 ft 83°	295.3 ft 73°	295.3 ft 65°	ft
									1,000 lb										
79	75.4	-	-	-	-	-	-	-	-	-	-	-	-	-	-	-	-	-	79
85	74.7	-	-	58.6	-	-	-	-	-	-	-	-	-	-	-	-	-	-	85
92	74.3	-	-	58.4	-	-	51.6	-	-	-	-	-	-	-	-	-	-	-	92
98	73.9	-	-	58.2	-	-	51.4	-	-	41.7	-	-	-	-	-	-	-	-	98
105	73.2	-	-	58.0	-	-	51.1	-	-	41.7	-	-	34.2	-	-	28.0	-	-	105
112	72.8	-	-	57.8	-	-	50.9	-	-	41.4	-	-	34.0	-	-	27.8	-	-	112
118	72.1	-	-	57.5	-	-	50.7	-	-	41.4	-	-	33.7	-	-	27.6	-	-	118
125	71.7	-	-	57.1	-	-	50.5	-	-	41.4	-	-	33.3	-	-	27.3	-	-	125
131	71.0	-	-	56.9	-	-	50.0	-	-	41.2	-	-	33.1	-	-	27.1	-	-	131
138	70.5	66.6	-	56.7	-	-	49.8	-	-	41.2	-	-	32.8	-	-	26.9	-	-	138
144	69.9	64.4	-	56.4	54.0	-	49.6	-	-	41.0	-	-	32.6	-	-	26.7	-	-	144
151	69.2	62.4	-	56.2	53.1	-	49.4	49.2	-	40.8	-	-	32.2	-	-	26.5	-	-	151
158	67.5	60.2	-	56.0	52.2	-	49.2	48.3	-	40.6	-	-	32.0	-	-	26.2	-	-	158
164	63.9	58.0	-	55.8	51.1	-	48.9	47.4	-	40.3	40.6	-	31.7	-	-	25.8	-	-	164
177	57.8	52.2	48.1	55.3	49.4	-	48.3	45.4	-	39.7	40.1	-	31.1	32.0	-	25.1	-	-	177
190	52.5	47.4	43.7	50.9	45.9	41.9	48.1	43.7	-	39.2	39.5	-	30.6	31.5	-	24.5	25.6	-	190
203	41.7	43.2	39.7	46.5	41.7	37.9	45.2	40.1	35.9	38.4	39.0	-	30.0	31.1	-	23.8	24.7	-	203
217	-	39.7	36.4	40.8	38.1	34.6	41.2	36.6	32.6	37.5	36.2	32.2	29.1	30.4	-	23.1	23.8	-	217
230	-	-	33.3	-	34.8	31.3	37.7	33.3	29.5	36.6	33.1	29.1	28.0	29.8	28.9	22.5	23.1	-	230
243	-	-	-	-	32.2	28.7	27.6	30.4	26.9	34.4	30.0	26.5	27.1	28.7	26.0	21.8	22.5	23.8	243
256	-	-	-	-	-	26.2	-	28.0	24.5	27.6	27.3	24.0	26.5	27.1	23.6	21.2	21.8	22.7	256
269	-	-	-	-	-	-	-	-	22.3	-	25.1	21.8	25.8	24.9	21.4	20.5	21.4	20.5	269
282	-	-	-	-	-	-	-	-	-	-	22.9	19.8	19.2	22.7	19.4	19.8	20.7	18.5	282
295	-	-	-	-	-	-	-	-	-	-	-	18.1	-	20.7	17.6	19.2	20.1	16.8	295
308	-	-	-	-	-	-	-	-	-	-	-	-	-	-	16.1	-	18.3	15.2	308
322	-	-	-	-	-	-	-	-	-	-	-	-	-	-	-	-	16.8	13.9	322
335	-	-	-	-	-	-	-	-	-	-	-	-	-	-	-	-	-	12.6	335

Remarks

Counterweight 132,300 lb 176,400 lb 220,500 lb 264,600 lb 308,600 lb 352,700 lb 396,800 lb

Max. capacities with minimum counterweight

Further counterweight configurations on request

LIFTING CAPACITIES LUFFING FLY JIB, MAIN BOOM 83° TO 65°

360° 85 %

108.9 ft + 13.1 ft Main boom + adapter

Fly jib

Radius	78.7 ft 83°	78.7 ft 73°	78.7 ft 65°	98.4 ft 83°	98.4 ft 73°	98.4 ft 65°	118.1 ft 83°	118.1 ft 73°	118.1 ft 65°	137.8 ft 83°	137.8 ft 73°	137.8 ft 65°	157.5 ft 83°	157.5 ft 73°	157.5 ft 65°	177.2 ft 83°	177.2 ft 73°	177.2 ft 65°	Radius
ft									1,000 lb										ft
59	160.5	-	-	144.2	-	-	128.8	-	-	-	-	-	-	-	-	-	-	-	59
66	151.2	-	-	138.2	-	-	124.8	-	-	105.4	-	-	-	-	-	-	-	-	66
72	141.8	-	-	132.3	-	-	121.0	-	-	103.8	-	-	90.2	-	-	-	-	-	72
79	134.5	-	-	126.3	-	-	117.1	-	-	102.3	-	-	89.5	-	-	76.9	-	-	79
85	129.2	-	-	120.6	-	-	112.7	-	-	100.8	-	-	88.8	-	-	76.1	-	-	85
92	125.0	103.8	-	115.7	100.1	-	108.0	-	-	98.5	-	-	88.2	-	-	75.4	-	-	92
98	-	97.4	-	111.8	94.6	-	103.6	-	-	95.5	-	-	87.3	-	-	74.7	-	-	98
105	-	92.6	-	108.9	89.3	-	100.3	85.1	-	92.2	-	-	85.8	-	-	73.9	-	-	105
112	-	87.7	-	100.8	84.2	-	97.2	81.1	-	89.1	77.2	-	84.2	-	-	73.0	-	-	112
118	-	-	74.1	-	80.5	-	94.6	77.2	-	86.4	73.9	-	82.7	-	-	71.9	-	-	118
125	-	-	69.9	-	76.7	68.8	91.1	73.4	-	84.0	70.3	-	81.1	70.5	-	70.8	-	-	125
131	-	-	-	-	75.0	65.5	71.2	70.5	62.6	81.6	67.2	-	79.4	67.7	-	69.9	64.6	-	131
138	-	-	-	-	-	61.9	-	67.9	59.7	79.4	63.9	-	77.6	64.6	-	68.8	62.2	-	138
144	-	-	-	-	-	60.0	-	66.6	57.1	75.4	61.7	55.3	75.6	61.9	-	67.7	59.7	-	144
151	-	-	-	-	-	-	-	65.0	54.7	57.5	59.3	52.7	72.5	59.3	-	66.6	57.1	-	151
158	-	-	-	-	-	-	-	-	52.9	-	57.8	50.5	68.8	57.3	50.5	65.3	54.9	-	158
164	-	-	-	-	-	-	-	-	51.1	-	56.2	48.3	63.5	55.6	48.3	63.9	52.5	-	164
177	-	-	-	-	-	-	-	-	-	-	-	44.8	-	52.0	44.5	57.8	49.4	42.8	177
190	-	-	-	-	-	-	-	-	-	-	-	-	-	48.5	41.2	40.3	46.1	39.5	190
203	-	-	-	-	-	-	-	-	-	-	-	-	-	-	39.7	-	43.0	36.6	203
217	-	-	-	-	-	-	-	-	-	-	-	-	-	-	-	-	-	34.8	217

ft	196.9 ft			216.5 ft			236.2 ft			255.9 ft			275.6 ft			295.3 ft			ft
									1,000 lb										
85	68.3	-	-	-	-	-	-	-	-	-	-	-	-	-	-	-	-	-	85
92	67.7	-	-	53.8	-	-	45.6	-	-	-	-	-	-	-	-	-	-	-	92
98	67.0	-	-	53.6	-	-	45.4	-	-	38.4	-	-	-	-	-	-	-	-	98
105	66.4	-	-	53.4	-	-	45.2	-	-	38.1	-	-	31.1	-	-	-	-	-	105
112	65.7	-	-	53.1	-	-	45.0	-	-	38.1	-	-	30.9	-	-	24.7	-	-	112
118	65.0	-	-	52.9	-	-	45.0	-	-	37.9	-	-	30.9	-	-	24.5	-	-	118
125	64.4	-	-	52.7	-	-	44.8	-	-	37.9	-	-	30.6	-	-	24.5	-	-	125
131	63.9	-	-	52.2	-	-	44.5	-	-	37.7	-	-	30.6	-	-	24.3	-	-	131
138	63.3	-	-	51.8	-	-	44.3	-	-	37.5	-	-	30.4	-	-	24.0	-	-	138
144	62.6	57.5	-	51.6	-	-	44.3	-	-	37.5	-	-	30.4	-	-	24.0	-	-	144
151	61.9	55.6	-	51.1	47.8	-	44.1	-	-	37.3	-	-	30.2	-	-	23.8	-	-	151
158	61.1	53.4	-	50.7	46.7	-	44.1	42.5	-	37.3	-	-	30.0	-	-	23.6	-	-	158
164	60.0	51.4	-	50.3	45.4	-	43.9	41.4	-	37.3	-	-	30.0	-	-	23.6	-	-	164
177	57.3	47.4	-	49.6	43.0	-	43.7	39.5	-	37.0	34.6	-	29.8	29.5	-	23.1	-	-	177
190	52.0	44.5	38.8	48.7	40.6	36.8	43.2	37.5	-	36.8	33.7	-	29.5	29.3	-	22.9	23.4	-	190
203	44.8	41.9	35.7	46.1	38.1	33.7	42.5	35.5	32.2	36.4	32.8	-	29.3	29.3	-	22.7	23.1	-	203
217	-	38.8	33.3	42.1	35.9	31.1	40.8	33.5	29.5	35.9	31.7	28.7	28.7	29.1	-	22.5	22.9	-	217
230	-	35.9	31.5	27.8	34.2	28.9	37.3	31.5	27.1	35.5	30.2	26.2	28.0	28.9	25.8	21.8	22.7	-	230
243	-	-	29.5	-	31.3	27.1	30.0	29.5	25.1	34.2	28.4	24.0	27.3	27.3	23.8	21.4	22.3	22.7	243
256	-	-	-	-	-	25.1	-	27.1	23.1	29.3	26.7	22.5	26.7	25.8	21.8	20.9	21.8	20.9	256
269	-	-	-	-	-	-	-	24.9	21.2	18.1	24.3	20.7	26.0	24.0	20.3	20.3	21.2	19.4	269
282	-	-	-	-	-	-	-	-	19.4	-	22.3	18.7	20.9	21.8	18.3	19.8	20.7	17.4	282
295	-	-	-	-	-	-	-	-	-	-	-	17.0	-	20.1	16.8	19.4	19.2	15.7	295
308	-	-	-	-	-	-	-	-	-	-	-	-	-	18.5	15.2	-	17.4	14.1	308
322	-	-	-	-	-	-	-	-	-	-	-	-	-	-	13.7	-	16.1	12.8	322
335	-	-	-	-	-	-	-	-	-	-	-	-	-	-	-	-	-	11.5	335
348	-	-	-	-	-	-	-	-	-	-	-	-	-	-	-	-	-	-	348

Remarks

Counterweight	132,300 lb	176,400 lb	220,500 lb	264,600 lb	308,600 lb	352,700 lb	396,800 lb

Max. capacities with minimum counterweight

Further counterweight configurations on request

LIFTING CAPACITIES LUFFING FLY JIB WITH SSL, MAIN BOOM 83°–65°

360° 85 %

108.9 ft + 13.1 ft Main boom + adapter

	Fly jib															
	98.4 ft			118.1 ft			137.8 ft			157.5 ft			177.2 ft			
Radius	83°	73°	65°	83°	73°	65°	83°	73°	65°	83°	73°	65°	83°	73°	65°	Radius
ft	1,000 lb															ft
53	198.4	-	-	-	-	-	-	-	-	-	-	-	-	-	-	53
59	195.6	-	-	170.0	-	-	-	-	-	-	-	-	-	-	-	59
66	181.9	-	-	179.2	-	-	143.5	-	-	-	-	-	-	-	-	66
72	164.5	-	-	162.7	-	-	161.2	-	-	136.2	-	-	-	-	-	72
79	150.1	-	-	148.4	-	-	146.6	-	-	131.2	-	-	118.2	-	-	79
85	137.8	-	-	136.0	-	-	134.5	-	-	126.1	-	-	116.4	-	-	85
92	127.2	113.8	-	125.4	-	-	123.9	-	-	121.0	-	-	114.6	-	-	92
98	118.2	105.6	-	116.4	-	-	114.6	-	-	116.0	-	-	112.7	-	-	98
105	110.2	98.3	-	108.5	96.3	-	106.7	-	-	108.2	-	-	106.5	-	-	105
112	99.4	91.9	-	101.4	89.9	-	99.6	88.0	-	101.2	-	-	99.4	-	-	112
118	-	86.2	78.0	95.0	84.2	-	93.3	82.2	-	94.8	-	-	93.3	-	-	118
125	-	81.1	73.4	89.5	79.1	-	87.7	77.2	-	89.1	78.5	-	87.5	-	-	125
131	-	76.7	69.2	70.1	74.5	67.0	82.7	72.8	-	84.0	73.9	-	82.5	72.1	-	131
138	-	-	65.5	-	70.3	63.3	78.0	68.6	-	79.4	69.7	-	77.8	67.9	-	138
144	-	-	61.9	-	66.8	59.7	74.1	64.8	57.8	75.2	65.9	-	73.6	64.2	-	144
151	-	-	-	-	63.5	56.7	56.4	61.3	54.7	71.4	62.6	-	69.9	60.8	-	151
158	-	-	-	-	-	53.8	-	58.2	51.8	67.9	59.5	52.9	66.4	57.8	-	158
164	-	-	-	-	-	51.4	-	55.3	49.2	62.8	56.4	50.3	63.3	54.9	-	164
177	-	-	-	-	-	-	-	-	44.5	-	51.4	45.6	57.5	49.6	43.9	177
190	-	-	-	-	-	-	-	-	-	-	47.2	41.7	39.7	45.4	39.7	190
203	-	-	-	-	-	-	-	-	-	-	-	38.1	-	41.7	36.4	203
217	-	-	-	-	-	-	-	-	-	-	-	-	-	-	33.3	217
230	-	-	-	-	-	-	-	-	-	-	-	-	-	-	-	230

	196.9 ft			216.5 ft			236.2 ft			255.9 ft			275.6 ft			295.3 ft			
ft	1,000 lb																		ft
85	91.1	-	-	68.8	-	-	-	-	-	-	-	-	-	-	-	-	-	-	85
92	89.1	-	-	73.9	-	-	56.7	-	-	-	-	-	-	-	-	-	-	-	92
98	87.3	-	-	71.9	-	-	61.3	-	-	48.7	-	-	-	-	-	-	-	-	98
105	85.5	-	-	69.9	-	-	60.4	-	-	48.1	-	-	39.2	-	-	-	-	-	105
112	83.6	-	-	68.1	-	-	59.7	-	-	47.4	-	-	38.6	-	-	32.0	-	-	112
118	81.8	-	-	66.1	-	-	58.9	-	-	46.5	-	-	38.1	-	-	31.3	-	-	118
125	79.8	-	-	64.2	-	-	58.2	-	-	45.9	-	-	37.5	-	-	30.9	-	-	125
131	78.0	-	-	62.6	-	-	57.3	-	-	45.2	-	-	37.0	-	-	30.2	-	-	131
138	76.3	67.2	-	61.3	-	-	56.4	-	-	44.5	-	-	36.4	-	-	29.8	-	-	138
144	73.0	63.5	-	60.0	-	-	55.3	-	-	43.9	-	-	35.9	-	-	29.3	-	-	144
151	69.2	60.0	-	58.6	56.2	-	54.5	-	-	43.0	-	-	35.3	-	-	28.7	-	-	151
158	65.7	56.9	-	57.1	55.1	-	53.4	45.0	-	42.1	-	-	34.6	-	-	28.2	-	-	158
164	62.4	54.0	-	55.8	52.2	-	52.2	44.5	-	41.0	35.9	-	33.7	-	-	27.6	-	-	164
177	56.7	48.9	43.0	54.0	47.0	-	50.0	43.7	-	39.2	35.5	-	32.0	31.7	-	26.5	-	-	177
190	51.8	44.5	38.8	50.0	42.5	37.0	48.3	40.8	-	37.7	34.8	-	30.6	30.6	-	25.1	24.7	-	190
203	44.1	40.8	35.5	45.9	38.8	33.5	44.1	36.8	31.5	37.0	34.4	-	29.3	29.5	-	23.8	23.8	-	203
217	-	37.5	32.4	41.9	35.5	30.4	40.3	33.5	28.4	36.4	33.3	28.0	28.4	28.4	-	22.7	22.9	-	217
230	-	34.6	29.8	27.1	32.6	27.8	37.0	30.6	25.8	35.7	30.2	25.4	27.6	27.6	24.9	22.0	22.0	-	230
243	-	-	27.6	-	30.0	25.4	29.1	28.0	23.4	33.7	27.6	22.9	26.7	26.9	22.5	21.2	21.2	20.3	243
256	-	-	-	-	-	23.4	-	25.8	21.4	29.3	25.1	20.7	26.0	24.9	20.5	20.5	20.3	19.4	256
269	-	-	-	-	-	-	-	23.8	19.4	-	23.1	19.0	25.6	22.7	18.5	19.8	19.4	17.6	269
282	-	-	-	-	-	-	-	-	17.6	-	21.2	17.2	20.9	20.9	16.8	19.4	18.7	15.9	282
295	-	-	-	-	-	-	-	-	-	-	-	15.7	-	19.2	15.2	18.7	18.1	14.3	295
308	-	-	-	-	-	-	-	-	-	-	-	-	-	-	13.7	-	16.8	12.8	308
322	-	-	-	-	-	-	-	-	-	-	-	-	-	-	12.3	-	15.2	11.5	322
335	-	-	-	-	-	-	-	-	-	-	-	-	-	-	-	-	-	10.4	335
348	-	-	-	-	-	-	-	-	-	-	-	-	-	-	-	-	-	-	348

Remarks

Counterweight 176,400 lb 220,500 lb 264,600 lb 308,600 lb 352,700 lb 396,800 lb

Max. capacities with minimum counterweight

Further counterweight configurations on request

5

LIFTING CAPACITIES LUFFING FLY JIB, MAIN BOOM 83° TO 65°

360° 85 %

124.3 ft + 13.1 ft Main boom + adapter

Fly jib

Radius	78.7 ft 83°	78.7 ft 73°	78.7 ft 65°	98.4 ft 83°	98.4 ft 73°	98.4 ft 65°	118.1 ft 83°	118.1 ft 73°	118.1 ft 65°	137.8 ft 83°	137.8 ft 73°	137.8 ft 65°	157.5 ft 83°	157.5 ft 73°	157.5 ft 65°	177.2 ft 83°	177.2 ft 73°	177.2 ft 65°	Radius
ft									1,000 lb										ft
59	140.7	-	-	125.7	-	-	-	-	-	-	-	-	-	-	-	-	-	-	59
66	132.5	-	-	120.6	-	-	107.1	-	-	-	-	-	-	-	-	-	-	-	66
72	125.0	-	-	115.3	-	-	103.8	-	-	89.9	-	-	77.6	-	-	-	-	-	72
79	117.7	-	-	110.5	-	-	100.5	-	-	88.0	-	-	76.3	-	-	66.6	-	-	79
85	112.9	-	-	105.6	-	-	97.0	-	-	85.8	-	-	75.0	-	-	65.9	-	-	85
92	108.2	-	-	100.8	-	-	93.5	-	-	83.6	-	-	73.6	-	-	65.3	-	-	92
98	-	86.6	-	97.4	84.9	-	89.9	-	-	81.1	-	-	72.3	-	-	64.4	-	-	98
105	-	81.6	-	94.6	79.8	-	86.9	-	-	78.5	-	-	71.0	-	-	63.7	-	-	105
112	-	76.5	-	91.5	75.0	-	84.0	71.4	-	76.1	-	-	69.7	-	-	62.8	-	-	112
118	-	73.4	-	-	71.0	-	81.6	67.7	-	73.9	65.5	-	68.1	-	-	61.7	-	-	118
125	-	-	61.7	-	67.2	-	79.1	63.9	-	71.7	62.4	-	66.8	-	-	60.8	-	-	125
131	-	-	58.6	-	64.8	57.3	77.4	61.3	-	69.7	59.3	-	65.5	60.0	-	59.7	-	-	131
138	-	-	-	-	62.2	54.0	-	58.4	-	67.7	56.2	-	64.2	57.3	-	58.6	55.1	-	138
144	-	-	-	-	-	51.6	-	56.2	48.3	66.1	53.8	-	63.1	54.7	-	57.8	52.7	-	144
151	-	-	-	-	-	48.9	-	54.2	45.6	64.8	51.4	44.8	61.9	52.0	-	56.7	50.5	-	151
158	-	-	-	-	-	-	-	53.4	43.7	-	49.2	42.3	61.1	50.0	-	55.6	48.3	-	158
164	-	-	-	-	-	-	-	-	41.9	-	47.2	40.1	60.2	48.1	41.9	54.7	45.9	-	164
177	-	-	-	-	-	-	-	-	-	-	45.4	36.8	-	44.5	37.9	52.7	42.5	36.8	177
190	-	-	-	-	-	-	-	-	-	-	-	34.4	-	42.5	35.1	45.4	39.2	33.3	190
203	-	-	-	-	-	-	-	-	-	-	-	-	-	-	32.6	-	37.0	30.6	203
217	-	-	-	-	-	-	-	-	-	-	-	-	-	-	-	-	35.9	28.4	217
230	-	-	-	-	-	-	-	-	-	-	-	-	-	-	-	-	-	26.9	230
243	-	-	-	-	-	-	-	-	-	-	-	-	-	-	-	-	-	-	243

ft	196.9 ft			216.5 ft			236.2 ft			255.9 ft			275.6 ft			295.3 ft			ft
									1,000 lb										
85	59.3	-	-	-	-	-	-	-	-	-	-	-	-	-	-	-	-	-	85
92	58.6	-	-	46.1	-	-	-	-	-	-	-	-	-	-	-	-	-	-	92
98	57.8	-	-	45.9	-	-	40.8	-	-	-	-	-	-	-	-	-	-	-	98
105	57.1	-	-	45.6	-	-	40.3	-	-	33.1	-	-	-	-	-	-	-	-	105
112	56.2	-	-	45.2	-	-	40.1	-	-	33.1	-	-	26.9	-	-	21.8	-	-	112
118	55.6	-	-	45.0	-	-	39.9	-	-	33.1	-	-	26.9	-	-	21.8	-	-	118
125	54.7	-	-	44.5	-	-	39.7	-	-	32.8	-	-	26.9	-	-	21.6	-	-	125
131	54.0	-	-	44.3	-	-	39.2	-	-	32.8	-	-	26.7	-	-	21.4	-	-	131
138	53.1	-	-	44.1	-	-	39.0	-	-	32.8	-	-	26.7	-	-	21.4	-	-	138
144	52.5	-	-	43.7	-	-	38.8	-	-	32.6	-	-	26.7	-	-	21.2	-	-	144
151	51.6	47.8	-	43.4	-	-	38.6	-	-	32.6	-	-	26.5	-	-	21.2	-	-	151
158	50.9	46.1	-	43.2	40.8	-	38.1	-	-	32.6	-	-	26.5	-	-	20.9	-	-	158
164	50.0	44.3	-	42.8	39.5	-	37.9	34.8	-	32.4	-	-	26.5	-	-	20.9	-	-	164
177	48.7	40.6	-	42.1	37.3	-	37.5	33.3	-	32.4	30.2	-	26.2	-	-	20.7	-	-	177
190	47.2	37.7	33.5	41.7	35.1	-	36.8	31.7	-	32.2	29.1	-	26.0	24.7	-	20.3	-	-	190
203	46.3	35.1	30.2	41.0	32.6	28.7	36.4	30.4	-	32.0	28.0	-	25.8	24.5	-	20.1	19.4	-	203
217	-	32.6	27.8	40.3	30.4	25.8	35.7	28.4	24.7	32.0	26.9	-	25.8	24.3	-	19.8	19.2	-	217
230	-	31.7	25.6	31.7	28.0	23.6	35.3	26.5	22.3	31.7	25.4	21.8	25.6	24.0	-	19.6	18.7	-	230
243	-	-	24.3	-	27.1	21.6	32.0	24.3	20.1	31.7	23.6	19.6	25.4	22.9	19.6	19.4	18.5	-	243
256	-	-	-	-	26.2	20.3	-	23.1	18.3	30.9	21.8	17.6	25.1	21.4	17.6	19.2	17.9	14.6	256
269	-	-	-	-	-	19.4	-	22.5	17.0	20.9	20.5	16.1	25.1	19.8	15.7	19.0	17.0	13.4	269
282	-	-	-	-	-	-	-	-	16.1	-	19.8	14.6	22.7	18.3	14.3	18.7	16.1	12.3	282
295	-	-	-	-	-	-	-	-	-	-	19.2	13.9	-	17.6	13.0	18.5	15.2	11.2	295
308	-	-	-	-	-	-	-	-	-	-	-	13.0	-	17.2	12.1	14.1	14.8	10.4	308
322	-	-	-	-	-	-	-	-	-	-	-	-	-	-	11.5	-	14.6	9.7	322
335	-	-	-	-	-	-	-	-	-	-	-	-	-	-	-	-	13.4	9.3	335
348	-	-	-	-	-	-	-	-	-	-	-	-	-	-	-	-	-	8.8	348

Remarks

Counterweight 132,300 lb 176,400 lb 220,500 lb 264,600 lb 308,600 lb 352,700 lb 396,800 lb

Max. capacities with minimum counterweight

Further counterweight configurations on request

LIFTING CAPACITIES LUFFING FLY JIB WITH SSL, MAIN BOOM 83°–65°

360° 85 %

124.3 ft + 13.1 ft Main boom + adapter

	Fly jib															
	98.4 ft			118.1 ft			137.8 ft			157.5 ft			177.2 ft			
Radius	83°	73°	65°	83°	73°	65°	83°	73°	65°	83°	73°	65°	83°	73°	65°	Radius
ft	1,000 lb															ft
59	181.7	-	-	-	-	-	-	-	-	-	-	-	-	-	-	59
66	170.6	-	-	166.9	-	-	-	-	-	-	-	-	-	-	-	66
72	160.5	-	-	157.2	-	-	150.4	-	-	-	-	-	-	-	-	72
79	148.8	-	-	147.0	-	-	142.4	-	-	130.5	-	-	95.9	-	-	79
85	136.7	-	-	134.9	-	-	133.4	-	-	125.9	-	-	108.2	-	-	85
92	126.1	-	-	124.6	-	-	122.8	-	-	121.3	-	-	106.7	-	-	92
98	117.1	103.4	-	115.3	-	-	113.8	-	-	115.3	-	-	104.9	-	-	98
105	109.1	96.1	-	107.4	-	-	105.8	-	-	107.4	-	-	103.4	-	-	105
112	102.3	89.9	-	100.3	88.0	-	98.8	-	-	100.3	-	-	98.5	-	-	112
118	-	84.2	-	94.1	82.2	-	92.4	80.5	-	93.9	-	-	92.4	-	-	118
125	-	79.4	-	88.6	77.4	-	86.9	75.4	-	88.4	-	-	86.6	-	-	125
131	-	74.7	66.8	79.4	72.8	-	81.8	71.0	-	83.3	72.1	-	81.6	-	-	131
138	-	71.0	63.1	-	68.8	60.8	77.4	66.8	-	78.7	68.1	-	77.2	66.4	-	138
144	-	-	59.7	-	65.0	57.5	73.2	63.1	-	74.5	64.4	-	73.0	62.6	-	144
151	-	-	56.7	-	61.7	54.5	64.4	59.7	52.5	70.8	61.1	-	69.2	59.3	-	151
158	-	-	-	-	58.9	51.8	-	56.7	49.8	67.2	58.0	-	65.7	56.2	-	158
164	-	-	-	-	-	49.2	-	54.0	47.2	64.2	55.1	48.3	62.6	53.4	-	164
177	-	-	-	-	-	-	-	49.2	42.8	-	50.0	43.7	56.9	48.3	41.9	177
190	-	-	-	-	-	-	-	-	38.8	-	45.9	39.9	44.8	44.1	37.9	190
203	-	-	-	-	-	-	-	-	-	-	-	36.6	-	40.3	34.6	203
217	-	-	-	-	-	-	-	-	-	-	-	-	-	37.3	31.7	217
230	-	-	-	-	-	-	-	-	-	-	-	-	-	-	29.1	230
243	-	-	-	-	-	-	-	-	-	-	-	-	-	-	-	243

	196.9 ft			216.5 ft			236.2 ft			255.9 ft			275.6 ft			295.3 ft			
ft	1,000 lb																		ft
85	85.5	-	-	-	-	-	-	-	-	-	-	-	-	-	-	-	-	-	85
92	84.2	-	-	70.3	-	-	-	-	-	-	-	-	-	-	-	-	-	-	92
98	82.7	-	-	69.0	-	-	57.5	-	-	-	-	-	-	-	-	-	-	-	98
105	81.4	-	-	67.5	-	-	57.3	-	-	46.5	-	-	34.6	-	-	-	-	-	105
112	79.8	-	-	66.1	-	-	56.9	-	-	45.9	-	-	37.0	-	-	26.9	-	-	112
118	78.5	-	-	64.8	-	-	56.7	-	-	45.4	-	-	36.6	-	-	30.0	-	-	118
125	76.9	-	-	63.3	-	-	56.2	-	-	45.0	-	-	36.4	-	-	29.5	-	-	125
131	75.6	-	-	61.9	-	-	55.8	-	-	44.3	-	-	35.9	-	-	29.3	-	-	131
138	74.1	-	-	60.6	-	-	55.6	-	-	43.9	-	-	35.5	-	-	28.9	-	-	138
144	72.3	61.7	-	59.3	-	-	54.7	-	-	43.2	-	-	35.1	-	-	28.7	-	-	144
151	68.3	58.4	-	58.0	-	-	53.6	-	-	42.5	-	-	34.8	-	-	28.2	-	-	151
158	65.0	55.3	-	56.9	49.8	-	52.7	-	-	41.7	-	-	34.2	-	-	27.8	-	-	158
164	61.7	52.5	-	55.6	49.2	-	51.6	40.1	-	40.8	-	-	33.5	-	-	27.6	-	-	164
177	56.2	47.4	-	53.6	45.6	-	49.6	39.5	-	39.0	33.1	-	32.0	-	-	26.2	-	-	177
190	51.4	43.2	37.0	49.4	41.2	-	47.6	38.8	-	37.3	32.8	-	30.4	28.2	-	24.9	22.3	-	190
203	47.2	39.5	33.7	45.2	37.5	31.7	43.4	35.7	-	35.9	32.6	-	28.9	27.6	-	23.8	21.8	-	203
217	-	36.2	30.9	41.4	34.4	28.9	39.7	32.4	26.7	34.8	32.0	-	27.8	26.9	-	22.5	21.2	-	217
230	-	33.5	28.2	30.9	31.3	26.2	36.4	29.5	24.3	33.7	29.1	23.8	26.7	26.2	-	21.6	20.7	-	230
243	-	-	25.8	-	28.9	23.8	32.0	26.9	21.8	33.1	26.5	21.4	25.8	25.6	20.9	20.7	20.3	17.0	243
256	-	-	-	-	26.7	21.8	-	24.7	19.8	30.6	24.3	19.4	25.1	23.8	19.0	19.8	19.6	16.8	256
269	-	-	-	-	-	20.1	-	22.7	17.9	20.9	22.0	17.4	24.7	21.8	17.0	19.2	19.2	16.1	269
282	-	-	-	-	-	-	-	-	16.3	-	20.3	15.9	22.7	19.8	15.4	18.7	18.5	14.3	282
295	-	-	-	-	-	-	-	-	-	-	18.5	14.3	-	18.3	13.9	18.5	17.2	12.8	295
308	-	-	-	-	-	-	-	-	-	-	-	12.8	-	16.8	12.3	14.1	15.7	11.5	308
322	-	-	-	-	-	-	-	-	-	-	-	-	-	-	11.2	-	14.3	10.1	322
335	-	-	-	-	-	-	-	-	-	-	-	-	-	-	-	-	-	9.0	335
348	-	-	-	-	-	-	-	-	-	-	-	-	-	-	-	-	-	7.9	348

Remarks

Counterweight 176,400 lb 220,500 lb 264,600 lb 308,600 lb 352,700 lb 396,800 lb

Max. capacities with minimum counterweight

Further counterweight configurations on request

5

LIFTING CAPACITIES LUFFING FLY JIB, MAIN BOOM 83° TO 65°

360° 85 %

139.4 ft + 13.1 ft Main boom + adapter

Fly jib

Radius	78.7 ft 83°	78.7 ft 73°	78.7 ft 65°	98.4 ft 83°	98.4 ft 73°	98.4 ft 65°	118.1 ft 83°	118.1 ft 73°	118.1 ft 65°	137.8 ft 83°	137.8 ft 73°	137.8 ft 65°	157.5 ft 83°	157.5 ft 73°	157.5 ft 65°	177.2 ft 83°	177.2 ft 73°	177.2 ft 65°	Radius
ft									1,000 lb										ft
59	-	-	-	101.2	-	-	-	-	-	-	-	-	-	-	-	-	-	-	59
66	109.1	-	-	97.2	-	-	88.0	-	-	-	-	-	-	-	-	-	-	-	66
72	103.2	-	-	93.5	-	-	84.7	-	-	73.9	-	-	-	-	-	-	-	-	72
79	97.7	-	-	89.5	-	-	81.6	-	-	71.7	-	-	64.2	-	-	-	-	-	79
85	92.8	-	-	85.8	-	-	78.3	-	-	69.4	-	-	62.8	-	-	55.6	-	-	85
92	88.8	-	-	82.0	-	-	75.8	-	-	67.0	-	-	61.3	-	-	54.2	-	-	92
98	-	-	-	78.9	-	-	73.2	-	-	65.0	-	-	60.0	-	-	53.1	-	-	98
105	-	67.5	-	76.5	65.7	-	71.0	-	-	63.3	-	-	58.6	-	-	52.0	-	-	105
112	-	63.1	-	73.9	61.7	-	68.6	-	-	61.3	-	-	57.3	-	-	50.9	-	-	112
118	-	60.2	-	-	58.4	-	66.8	55.6	-	59.7	-	-	56.2	-	-	49.8	-	-	118
125	-	-	-	-	54.9	-	64.8	52.7	-	58.0	49.4	-	54.9	-	-	48.7	-	-	125
131	-	-	-	-	52.2	-	63.5	50.0	-	56.7	47.0	-	53.8	-	-	47.8	-	-	131
138	-	-	-	-	49.8	44.3	-	47.4	-	55.3	44.5	-	52.7	45.6	-	46.7	-	-	138
144	-	-	-	-	-	41.9	-	45.4	-	54.2	42.3	-	51.8	43.4	-	45.9	41.7	-	144
151	-	-	-	-	-	39.7	-	43.7	37.7	53.4	40.1	-	50.9	41.4	-	45.0	39.7	-	151
158	-	-	-	-	-	38.1	-	42.8	35.9	-	38.6	-	50.0	39.5	-	44.3	37.9	-	158
164	-	-	-	-	-	-	-	-	34.2	-	37.0	32.4	49.2	37.7	-	43.7	35.9	-	164
177	-	-	-	-	-	-	-	-	31.5	-	34.8	29.3	-	35.1	30.6	42.3	32.6	-	177
190	-	-	-	-	-	-	-	-	-	-	-	26.9	-	32.8	27.8	41.7	30.4	26.5	190
203	-	-	-	-	-	-	-	-	-	-	-	-	-	-	25.8	-	28.0	23.8	203
217	-	-	-	-	-	-	-	-	-	-	-	-	-	-	24.3	-	27.3	21.8	217
230	-	-	-	-	-	-	-	-	-	-	-	-	-	-	-	-	-	20.5	230
243	-	-	-	-	-	-	-	-	-	-	-	-	-	-	-	-	-	-	243

ft	196.9 ft 83°	196.9 ft 73°	196.9 ft 65°	216.5 ft 83°	216.5 ft 73°	216.5 ft 65°	236.2 ft 83°	236.2 ft 73°	236.2 ft 65°	255.9 ft 83°	255.9 ft 73°	255.9 ft 65°	275.6 ft 83°	275.6 ft 73°	275.6 ft 65°	295.3 ft 83°	295.3 ft 73°	295.3 ft 65°	ft
									1,000 lb										
92	48.3	-	-	39.9	-	-	-	-	-	-	-	-	-	-	-	-	-	-	92
98	47.6	-	-	39.5	-	-	33.1	-	-	-	-	-	-	-	-	-	-	-	98
105	46.7	-	-	38.8	-	-	32.6	-	-	28.4	-	-	-	-	-	-	-	-	105
112	46.1	-	-	38.4	-	-	32.4	-	-	28.2	-	-	22.5	-	-	-	-	-	112
118	45.2	-	-	37.9	-	-	32.2	-	-	28.0	-	-	22.3	-	-	17.4	-	-	118
125	44.5	-	-	37.3	-	-	31.7	-	-	27.8	-	-	22.3	-	-	17.4	-	-	125
131	43.7	-	-	36.8	-	-	31.5	-	-	27.6	-	-	22.3	-	-	17.4	-	-	131
138	43.0	-	-	36.4	-	-	31.3	-	-	27.3	-	-	22.0	-	-	17.4	-	-	138
144	42.3	-	-	35.9	-	-	30.9	-	-	27.1	-	-	22.0	-	-	17.2	-	-	144
151	41.4	-	-	35.5	-	-	30.6	-	-	26.9	-	-	22.0	-	-	17.2	-	-	151
158	40.8	37.3	-	35.3	-	-	30.2	-	-	26.7	-	-	21.8	-	-	17.2	-	-	158
164	40.1	35.5	-	34.8	33.1	-	30.0	-	-	26.5	-	-	21.8	-	-	17.2	-	-	164
177	39.0	32.2	-	34.0	30.2	-	29.3	26.9	-	26.0	-	-	21.6	-	-	17.0	-	-	177
190	37.9	29.3	-	33.3	27.3	-	28.7	24.7	-	25.6	22.9	-	21.6	19.4	-	17.0	-	-	190
203	37.3	27.1	23.6	32.6	24.7	-	28.4	22.7	-	25.1	21.4	-	21.4	18.5	-	16.8	14.8	-	203
217	-	25.1	21.2	32.2	22.9	19.4	28.0	20.7	-	24.9	19.6	-	21.2	17.6	-	16.8	14.3	-	217
230	-	24.0	19.4	31.7	21.2	17.2	27.8	19.2	15.9	24.5	18.1	-	21.2	17.0	-	16.8	14.1	-	230
243	-	-	18.1	-	19.8	15.9	27.3	17.6	13.9	24.0	16.8	13.4	20.9	15.9	-	16.5	13.7	-	243
256	-	-	17.2	-	19.4	14.3	-	16.3	12.6	23.8	15.2	11.7	20.7	14.8	11.7	16.5	13.0	-	256
269	-	-	-	-	-	13.7	-	15.9	11.2	23.1	13.9	10.6	20.7	13.4	10.1	16.3	12.1	-	269
282	-	-	-	-	-	-	-	-	10.4	-	13.4	9.3	20.5	12.3	9.0	16.3	11.0	-	282
295	-	-	-	-	-	-	-	-	9.9	-	13.0	8.4	-	11.7	7.9	16.1	10.1	-	295
308	-	-	-	-	-	-	-	-	-	-	-	7.9	-	11.2	7.1	15.9	9.3	-	308
322	-	-	-	-	-	-	-	-	-	-	-	-	-	-	6.6	-	9.0	-	322
335	-	-	-	-	-	-	-	-	-	-	-	-	-	-	6.0	-	8.8	-	335

Remarks

Counterweight	132,300 lb	176,400 lb	220,500 lb	264,600 lb	308,600 lb	352,700 lb	396,800 lb

Max. capacities with minimum counterweight

Further counterweight configurations on request

LIFTING CAPACITIES LUFFING FLY JIB WITH SSL, MAIN BOOM 83°–65°

360° 85 %

139.4 ft + 13.1 ft Main boom + adapter

	Fly jib															
	98.4 ft			118.1 ft			137.8 ft			157.5 ft			177.2 ft			
Radius	83°	73°	65°	83°	73°	65°	83°	73°	65°	83°	73°	65°	83°	73°	65°	Radius
ft	1,000 lb															ft
59	153.4	-	-	-	-	-	-	-	-	-	-	-	-	-	-	59
66	164.2	-	-	131.4	-	-	-	-	-	-	-	-	-	-	-	66
72	154.3	-	-	147.5	-	-	111.3	-	-	-	-	-	-	-	-	72
79	144.2	-	-	138.9	-	-	130.5	-	-	97.0	-	-	-	-	-	79
85	135.6	-	-	130.3	-	-	124.3	-	-	117.3	-	-	98.3	-	-	85
92	125.2	-	-	122.8	-	-	117.9	-	-	112.7	-	-	96.3	-	-	92
98	116.2	-	-	114.4	-	-	111.8	-	-	108.0	-	-	94.4	-	-	98
105	108.2	94.1	-	106.5	-	-	104.9	-	-	103.4	-	-	92.4	-	-	105
112	101.2	88.0	-	99.4	-	-	97.9	-	-	99.0	-	-	90.4	-	-	112
118	-	82.5	-	93.3	80.5	-	91.7	-	-	93.0	-	-	88.0	-	-	118
125	-	77.6	-	87.7	75.6	-	86.0	73.6	-	87.5	-	-	85.5	-	-	125
131	-	73.2	-	82.9	71.0	-	81.1	69.2	-	82.5	70.5	-	80.9	-	-	131
138	-	69.2	60.8	-	67.0	-	76.5	65.3	-	78.0	66.6	-	76.3	-	-	138
144	-	-	57.5	-	63.5	-	72.5	61.5	-	73.9	62.8	-	72.3	61.1	-	144
151	-	-	54.7	-	60.2	52.5	68.8	58.2	-	70.1	59.5	-	68.6	57.8	-	151
158	-	-	52.0	-	57.3	49.8	-	55.3	47.6	66.6	56.4	-	65.0	54.7	-	158
164	-	-	-	-	-	47.2	-	52.5	45.2	63.5	53.8	-	61.9	51.8	-	164
177	-	-	-	-	-	43.0	-	47.6	40.8	-	48.7	41.9	56.2	47.0	-	177
190	-	-	-	-	-	-	-	-	37.0	-	44.5	38.1	48.5	42.8	36.2	190
203	-	-	-	-	-	-	-	-	-	-	-	34.8	-	39.0	32.8	203
217	-	-	-	-	-	-	-	-	-	-	-	32.0	-	35.9	30.0	217
230	-	-	-	-	-	-	-	-	-	-	-	-	-	-	27.6	230
243	-	-	-	-	-	-	-	-	-	-	-	-	-	-	-	243

	196.9 ft			216.5 ft			236.2 ft			255.9 ft			275.6 ft			295.3 ft			
ft	1,000 lb																		ft
92	80.0	-	-	54.9	-	-	-	-	-	-	-	-	-	-	-	-	-	-	92
98	78.7	-	-	63.9	-	-	46.5	-	-	-	-	-	-	-	-	-	-	-	98
105	77.4	-	-	63.1	-	-	55.8	-	-	38.4	-	-	-	-	-	-	-	-	105
112	76.1	-	-	61.9	-	-	55.3	-	-	43.7	-	-	35.5	-	-	-	-	-	112
118	74.5	-	-	61.1	-	-	54.9	-	-	43.4	-	-	35.3	-	-	28.7	-	-	118
125	73.2	-	-	60.2	-	-	54.5	-	-	43.0	-	-	34.8	-	-	28.4	-	-	125
131	71.9	-	-	59.1	-	-	54.2	-	-	42.8	-	-	34.6	-	-	28.2	-	-	131
138	70.3	-	-	58.2	-	-	53.8	-	-	42.3	-	-	34.4	-	-	28.0	-	-	138
144	69.0	-	-	57.3	-	-	53.1	-	-	42.1	-	-	34.2	-	-	27.8	-	-	144
151	67.7	54.7	-	56.4	-	-	52.5	-	-	41.7	-	-	34.0	-	-	27.6	-	-	151
158	64.4	53.6	-	55.3	43.2	-	51.6	-	-	41.0	-	-	33.5	-	-	27.1	-	-	158
164	61.1	51.1	-	54.5	42.8	-	50.7	-	-	40.3	-	-	33.1	-	-	26.9	-	-	164
177	55.6	46.1	-	52.7	41.4	-	48.9	35.5	-	38.6	30.6	-	31.7	-	-	26.0	-	-	177
190	50.7	41.9	-	48.9	40.1	-	47.2	34.8	-	37.0	30.2	-	30.2	23.8	-	24.9	-	-	190
203	46.5	38.4	32.0	44.8	36.4	-	43.0	34.2	-	35.5	30.0	-	28.9	23.6	-	23.8	18.1	-	203
217	-	35.1	29.1	41.0	33.1	27.1	39.2	31.3	25.1	34.6	29.5	-	27.6	23.6	-	22.5	17.9	-	217
230	-	32.4	26.7	34.6	30.4	24.7	35.9	28.4	22.7	33.5	28.0	22.3	26.7	23.4	-	21.6	17.9	-	230
243	-	-	24.5	-	27.8	22.5	33.1	25.8	20.3	32.4	25.6	20.1	25.6	23.1	18.5	20.7	17.6	-	243
256	-	-	22.5	-	25.6	20.3	-	23.6	18.3	30.2	23.1	17.9	24.7	22.9	17.4	19.8	17.4	13.4	256
269	-	-	-	-	-	18.5	-	21.6	16.5	23.1	21.2	16.1	24.0	20.7	15.7	19.0	17.4	13.4	269
282	-	-	-	-	-	-	-	-	15.0	-	19.4	14.6	23.4	19.0	14.1	18.5	17.2	13.0	282
295	-	-	-	-	-	-	-	-	13.7	-	17.6	13.0	-	17.2	12.6	18.1	16.3	11.7	295
308	-	-	-	-	-	-	-	-	-	-	-	11.7	-	15.9	11.2	15.9	14.8	10.1	308
322	-	-	-	-	-	-	-	-	-	-	-	-	-	-	9.9	-	13.4	9.0	322
335	-	-	-	-	-	-	-	-	-	-	-	-	-	-	8.8	-	12.3	7.9	335
348	-	-	-	-	-	-	-	-	-	-	-	-	-	-	-	-	-	6.8	348
361	-	-	-	-	-	-	-	-	-	-	-	-	-	-	-	-	-	-	361

Remarks

Counterweight 176,400 lb 220,500 lb 264,600 lb 308,600 lb 352,700 lb 396,800 lb

Max. capacities with minimum counterweight

Further counterweight configurations on request

5

LIFTING CAPACITIES LUFFING FLY JIB, MAIN BOOM 83° TO 65°

360° 85 %

154.9 ft + 13.1 ft Main boom + adapter

Fly jib

Radius	78.7 ft 83°	78.7 ft 73°	78.7 ft 65°	98.4 ft 83°	98.4 ft 73°	98.4 ft 65°	118.1 ft 83°	118.1 ft 73°	118.1 ft 65°	137.8 ft 83°	137.8 ft 73°	137.8 ft 65°	157.5 ft 83°	157.5 ft 73°	157.5 ft 65°	177.2 ft 83°	177.2 ft 73°	177.2 ft 65°	Radius
ft									1,000 lb										ft
66	88.6	-	-	78.3	-	-	-	-	-	-	-	-	-	-	-	-	-	-	66
72	84.2	-	-	75.4	-	-	68.8	-	-	-	-	-	-	-	-	-	-	-	72
79	80.7	-	-	72.5	-	-	66.6	-	-	57.1	-	-	52.2	-	-	-	-	-	79
85	77.4	-	-	70.1	-	-	64.4	-	-	55.3	-	-	51.1	-	-	45.6	-	-	85
92	74.7	-	-	67.7	-	-	62.4	-	-	53.6	-	-	50.0	-	-	44.8	-	-	92
98	71.9	-	-	65.5	-	-	60.4	-	-	52.0	-	-	48.9	-	-	43.9	-	-	98
105	-	-	-	63.5	-	-	58.4	-	-	50.7	-	-	47.8	-	-	42.8	-	-	105
112	-	53.1	-	61.7	50.0	-	56.4	-	-	49.4	-	-	46.7	-	-	41.9	-	-	112
118	-	50.3	-	60.6	47.2	-	55.1	-	-	48.1	-	-	45.6	-	-	41.0	-	-	118
125	-	47.4	-	-	44.3	-	53.6	42.1	-	46.7	-	-	44.8	-	-	40.1	-	-	125
131	-	-	-	-	42.3	-	52.2	39.9	-	45.6	38.1	-	43.7	-	-	39.2	-	-	131
138	-	-	-	-	40.3	-	51.1	37.7	-	44.8	36.2	-	42.8	-	-	38.6	-	-	138
144	-	-	-	-	39.0	34.0	-	36.2	-	43.7	34.2	-	41.9	35.3	-	37.7	-	-	144
151	-	-	-	-	-	32.2	-	34.6	-	42.8	32.2	-	41.2	33.5	-	36.8	31.7	-	151
158	-	-	-	-	-	30.4	-	33.5	28.2	42.3	30.9	-	40.3	32.0	-	36.2	30.2	-	158
164	-	-	-	-	-	28.9	-	32.2	26.9	-	29.5	-	39.7	30.2	-	35.7	28.7	-	164
177	-	-	-	-	-	-	-	-	24.5	-	27.1	22.5	38.8	28.0	-	34.4	25.8	-	177
190	-	-	-	-	-	-	-	-	-	-	-	20.3	-	25.8	21.4	33.7	23.6	-	190
203	-	-	-	-	-	-	-	-	-	-	-	18.7	-	24.7	19.6	-	21.8	17.6	203
217	-	-	-	-	-	-	-	-	-	-	-	-	-	-	18.1	-	20.5	16.1	217
230	-	-	-	-	-	-	-	-	-	-	-	-	-	-	-	-	-	14.6	230
243	-	-	-	-	-	-	-	-	-	-	-	-	-	-	-	-	-	13.7	243
256	-	-	-	-	-	-	-	-	-	-	-	-	-	-	-	-	-	-	256

ft	196.9 ft		-	216.5 ft			236.2 ft			255.9 ft			275.6 ft			295.3 ft			ft
									1,000 lb										
92	39.5	-	-	-	-	-	-	-	-	-	-	-	-	-	-	-	-	-	92
98	38.8	-	-	31.5	-	-	-	-	-	-	-	-	-	-	-	-	-	-	98
105	38.1	-	-	31.1	-	-	26.2	-	-	-	-	-	-	-	-	-	-	-	105
112	37.5	-	-	30.4	-	-	25.8	-	-	21.2	-	-	-	-	-	-	-	-	112
118	36.8	-	-	30.0	-	-	25.6	-	-	20.9	-	-	18.1	-	-	13.9	-	-	118
125	36.2	-	-	29.5	-	-	25.1	-	-	20.7	-	-	18.1	-	-	13.9	-	-	125
131	35.5	-	-	29.1	-	-	24.9	-	-	20.5	-	-	17.9	-	-	13.7	-	-	131
138	34.8	-	-	28.7	-	-	24.5	-	-	20.3	-	-	17.6	-	-	13.7	-	-	138
144	34.2	-	-	28.2	-	-	24.3	-	-	20.1	-	-	17.4	-	-	13.7	-	-	144
151	33.7	-	-	27.8	-	-	23.8	-	-	19.8	-	-	17.2	-	-	13.7	-	-	151
158	33.1	29.3	-	27.6	-	-	23.6	-	-	19.6	-	-	17.2	-	-	13.7	-	-	158
164	32.4	28.0	-	27.1	-	-	23.4	-	-	19.4	-	-	17.0	-	-	13.4	-	-	164
177	31.3	25.4	-	26.2	23.1	-	22.7	20.5	-	19.2	-	-	16.8	-	-	13.4	-	-	177
190	30.2	22.7	-	25.6	20.7	-	22.3	18.5	-	18.7	17.0	-	16.5	-	-	13.4	-	-	190
203	29.5	20.9	17.2	24.9	18.5	-	21.8	16.8	-	18.3	15.4	-	16.3	12.6	-	13.2	-	-	203
217	29.3	19.2	15.4	24.3	17.0	13.4	21.4	14.8	-	18.1	13.9	-	16.1	11.9	-	13.2	-	-	217
230	-	17.9	13.9	24.0	15.4	11.7	20.9	13.4	10.1	17.9	12.3	-	15.9	11.2	-	13.2	-	-	230
243	-	17.4	12.6	-	14.1	10.4	20.5	12.3	8.6	17.6	11.2	-	15.7	10.6	-	13.2	-	-	243
256	-	-	11.7	-	13.7	9.3	20.1	11.0	7.3	17.4	10.1	-	15.4	9.5	-	13.0	-	-	256
269	-	-	-	-	-	8.4	-	10.4	6.4	17.4	9.0	-	15.2	8.6	-	13.0	-	-	269
282	-	-	-	-	-	7.7	-	9.9	5.5	-	8.4	-	15.2	7.5	-	13.0	-	-	282
295	-	-	-	-	-	-	-	-	4.9	-	7.9	-	14.3	6.8	-	12.8	-	-	295
308	-	-	-	-	-	-	-	-	-	-	-	-	-	6.4	-	12.8	-	-	308
322	-	-	-	-	-	-	-	-	-	-	-	-	-	6.2	-	-	-	-	322
335	-	-	-	-	-	-	-	-	-	-	-	-	-	-	-	-	-	-	335

Remarks

Counterweight	132,300 lb	176,400 lb	220,500 lb	264,600 lb	308,600 lb	352,700 lb	396,800 lb

Max. capacities with minimum counterweight

Further counterweight configurations on request

LIFTING CAPACITIES LUFFING FLY JIB WITH SSL, MAIN BOOM 83°–65°

360° 85 %

154.9 ft + 13.1 ft Main boom + adapter

	Fly jib															
	98.4 ft			118.1 ft			137.8 ft			157.5 ft			177.2 ft			
Radius	83°	73°	65°	83°	73°	65°	83°	73°	65°	83°	73°	65°	83°	73°	65°	Radius
ft	1,000 lb															ft
66	138.0	-	-	-	-	-	-	-	-	-	-	-	-	-	-	66
72	127.9	-	-	121.5	-	-	-	-	-	-	-	-	-	-	-	72
79	121.9	-	-	113.8	-	-	110.2	-	-	84.7	-	-	-	-	-	79
85	117.9	-	-	106.0	-	-	103.6	-	-	101.2	-	-	71.9	-	-	85
92	114.0	-	-	100.8	-	-	97.0	-	-	95.9	-	-	87.3	-	-	92
98	109.8	-	-	97.7	-	-	90.4	-	-	90.6	-	-	83.8	-	-	98
105	104.5	-	-	94.6	-	-	85.8	-	-	85.5	-	-	80.2	-	-	105
112	99.4	86.2	-	91.7	-	-	81.4	-	-	80.5	-	-	76.9	-	-	112
118	94.1	80.7	-	88.8	78.0	-	79.1	-	-	77.2	-	-	73.6	-	-	118
125	-	75.8	-	86.0	73.9	-	76.9	-	-	73.6	-	-	70.3	-	-	125
131	-	71.4	-	82.0	69.4	-	75.2	67.5	-	70.1	-	-	67.2	-	-	131
138	-	67.7	-	66.8	65.5	-	73.4	63.7	-	67.7	63.5	-	64.4	-	-	138
144	-	64.2	55.6	-	61.9	-	71.2	60.0	-	66.4	61.3	-	61.5	-	-	144
151	-	-	52.7	-	58.6	-	68.1	56.9	-	65.0	58.2	-	58.4	53.1	-	151
158	-	-	50.0	-	55.8	47.8	54.5	53.8	-	63.7	55.1	-	56.9	51.8	-	158
164	-	-	47.6	-	53.1	45.4	-	51.1	-	62.4	52.5	-	55.3	50.5	-	164
177	-	-	-	-	-	41.0	-	46.3	39.0	46.1	47.6	40.1	53.1	45.6	-	177
190	-	-	-	-	-	-	-	-	35.3	-	43.4	36.4	50.9	41.4	34.4	190
203	-	-	-	-	-	-	-	-	32.2	-	39.9	33.3	-	37.9	31.3	203
217	-	-	-	-	-	-	-	-	-	-	-	30.4	-	34.8	28.4	217
230	-	-	-	-	-	-	-	-	-	-	-	-	-	-	26.0	230
243	-	-	-	-	-	-	-	-	-	-	-	-	-	-	23.8	243
256	-	-	-	-	-	-	-	-	-	-	-	-	-	-	-	256

	196.9 ft			216.5 ft			236.2 ft			255.9 ft			275.6 ft			295.3 ft			
ft	1,000 lb																		ft
92	58.2	-	-	-	-	-	-	-	-	-	-	-	-	-	-	-	-	-	92
98	69.2	-	-	48.7	-	-	-	-	-	-	-	-	-	-	-	-	-	-	98
105	67.5	-	-	59.1	-	-	48.3	-	-	-	-	-	-	-	-	-	-	-	105
112	65.7	-	-	57.8	-	-	47.6	-	-	40.1	-	-	24.5	-	-	-	-	-	112
118	63.9	-	-	56.4	-	-	47.2	-	-	39.9	-	-	31.7	-	-	18.7	-	-	118
125	62.2	-	-	55.1	-	-	46.5	-	-	39.7	-	-	31.5	-	-	25.4	-	-	125
131	60.6	-	-	53.8	-	-	46.1	-	-	39.5	-	-	31.5	-	-	25.1	-	-	131
138	58.9	-	-	52.5	-	-	45.4	-	-	39.2	-	-	31.3	-	-	24.9	-	-	138
144	57.1	-	-	51.1	-	-	44.8	-	-	39.0	-	-	31.1	-	-	24.7	-	-	144
151	55.3	-	-	50.0	-	-	44.1	-	-	38.8	-	-	30.9	-	-	24.7	-	-	151
158	53.8	45.0	-	48.7	-	-	43.2	-	-	38.4	-	-	30.6	-	-	24.5	-	-	158
164	52.0	44.1	-	47.6	37.5	-	42.3	-	-	37.9	-	-	30.6	-	-	24.3	-	-	164
177	49.4	42.5	-	45.2	36.6	-	40.6	31.1	-	36.8	-	-	29.8	-	-	23.8	-	-	177
190	46.7	40.8	-	43.0	35.7	-	38.6	30.4	-	35.5	24.7	-	28.9	-	-	23.1	-	-	190
203	44.5	37.0	30.4	40.8	34.8	-	36.8	29.5	-	34.4	24.3	-	28.0	19.4	-	22.5	14.8	-	203
217	32.6	34.0	27.6	38.6	32.0	25.6	34.8	28.9	-	32.8	24.0	-	27.3	19.2	-	21.6	14.8	-	217
230	-	31.3	25.1	36.2	29.3	23.1	33.1	27.3	21.2	31.3	23.6	-	26.2	19.2	-	20.9	14.8	-	230
243	-	28.9	22.9	-	26.7	20.9	32.2	24.9	19.0	29.5	23.1	18.3	25.4	19.0	-	20.3	14.8	-	243
256	-	-	20.9	-	24.7	19.0	20.9	22.7	17.0	28.7	22.3	16.5	24.5	18.7	13.9	19.4	14.8	-	256
269	-	-	-	-	-	17.2	-	20.7	15.2	25.1	20.3	14.8	23.8	18.5	13.7	18.7	14.8	9.7	269
282	-	-	-	-	-	15.7	-	19.0	13.7	-	18.5	13.2	23.4	18.1	12.8	18.1	14.8	9.7	282
295	-	-	-	-	-	-	-	-	12.3	-	16.8	11.7	14.3	16.3	11.2	17.6	14.8	9.7	295
308	-	-	-	-	-	-	-	-	-	-	-	10.4	-	15.0	9.9	17.2	13.9	9.0	308
322	-	-	-	-	-	-	-	-	-	-	-	9.3	-	13.7	8.8	-	12.6	7.7	322
335	-	-	-	-	-	-	-	-	-	-	-	-	-	-	7.7	-	11.5	6.8	335
348	-	-	-	-	-	-	-	-	-	-	-	-	-	-	-	-	-	5.7	348
361	-	-	-	-	-	-	-	-	-	-	-	-	-	-	-	-	-	4.9	361

Remarks

Counterweight 176,400 lb 220,500 lb 264,600 lb 308,600 lb 352,700 lb 396,800 lb

Max. capacities with minimum counterweight

Further counterweight configurations on request

LIFTING CAPACITIES LUFFING FLY JIB, MAIN BOOM 83° TO 65°

360° 85 %

169.9 ft + 13.1 ft Main boom + adapter

Fly jib

Radius	78.7 ft 83°	78.7 ft 73°	78.7 ft 65°	98.4 ft 83°	98.4 ft 73°	98.4 ft 65°	118.1 ft 83°	118.1 ft 73°	118.1 ft 65°	137.8 ft 83°	137.8 ft 73°	137.8 ft 65°	157.5 ft 83°	157.5 ft 73°	157.5 ft 65°	177.2 ft 83°	177.2 ft 73°	177.2 ft 65°	Radius
ft									1,000 lb										ft
66	71.0	-	-	62.2	-	-	-	-	-	-	-	-	-	-	-	-	-	-	66
72	67.7	-	-	60.0	-	-	53.6	-	-	-	-	-	-	-	-	-	-	-	72
79	65.0	-	-	57.5	-	-	52.0	-	-	45.0	-	-	-	-	-	-	-	-	79
85	62.4	-	-	55.8	-	-	50.5	-	-	43.9	-	-	41.0	-	-	-	-	-	85
92	60.4	-	-	54.2	-	-	48.9	-	-	42.5	-	-	39.9	-	-	35.1	-	-	92
98	58.9	-	-	52.5	-	-	47.6	-	-	41.4	-	-	39.0	-	-	34.4	-	-	98
105	-	-	-	51.4	-	-	46.3	-	-	40.3	-	-	37.9	-	-	33.5	-	-	105
112	-	-	-	50.3	-	-	45.0	-	-	39.2	-	-	37.0	-	-	32.8	-	-	112
118	-	41.2	-	49.4	39.2	-	43.9	-	-	38.4	-	-	36.2	-	-	32.2	-	-	118
125	-	38.8	-	-	37.3	-	42.5	-	-	37.3	-	-	35.3	-	-	31.3	-	-	125
131	-	37.3	-	-	35.3	-	41.7	32.6	-	36.4	-	-	34.4	-	-	30.6	-	-	131
138	-	-	-	-	33.3	-	40.6	31.1	-	35.7	29.1	-	33.7	-	-	30.2	-	-	138
144	-	-	-	-	31.7	-	-	29.5	-	34.8	27.6	-	33.1	-	-	29.5	-	-	144
151	-	-	-	-	30.4	-	-	28.0	-	34.2	26.0	-	32.4	26.9	-	28.9	-	-	151
158	-	-	-	-	-	24.5	-	26.7	-	33.7	24.7	-	31.7	25.6	-	28.2	23.6	-	158
164	-	-	-	-	-	23.1	-	25.6	20.9	-	23.4	-	31.1	24.3	-	27.8	22.5	-	164
177	-	-	-	-	-	-	-	-	18.7	-	21.2	17.0	30.6	22.0	-	26.9	20.1	-	177
190	-	-	-	-	-	-	-	-	17.0	-	19.8	15.0	-	20.3	16.1	26.0	18.1	-	190
203	-	-	-	-	-	-	-	-	-	-	-	13.4	-	19.0	14.3	-	16.5	12.6	203
217	-	-	-	-	-	-	-	-	-	-	-	-	-	-	13.0	-	15.2	11.0	217
230	-	-	-	-	-	-	-	-	-	-	-	-	-	-	12.1	-	14.6	9.9	230
243	-	-	-	-	-	-	-	-	-	-	-	-	-	-	-	-	-	8.8	243
256	-	-	-	-	-	-	-	-	-	-	-	-	-	-	-	-	-	-	256

ft	196.9 ft			216.5 ft			236.2 ft			255.9 ft			275.6 ft			295.3 ft			ft
									1,000 lb										
98	30.0	-	-	23.8	-	-	-	-	-	-	-	-	-	-	-	-	-	-	98
105	29.3	-	-	23.4	-	-	19.0	-	-	-	-	-	-	-	-	-	-	-	105
112	28.9	-	-	23.1	-	-	18.7	-	-	14.8	-	-	-	-	-	-	-	-	112
118	28.4	-	-	22.7	-	-	18.3	-	-	14.6	-	-	11.2	-	-	-	-	-	118
125	27.8	-	-	22.3	-	-	18.1	-	-	14.3	-	-	11.0	-	-	7.9	-	-	125
131	27.3	-	-	22.0	-	-	17.9	-	-	14.1	-	-	11.0	-	-	7.9	-	-	131
138	26.9	-	-	21.6	-	-	17.4	-	-	13.9	-	-	10.8	-	-	7.7	-	-	138
144	26.2	-	-	21.2	-	-	17.2	-	-	13.7	-	-	10.6	-	-	7.7	-	-	144
151	25.8	-	-	20.9	-	-	17.0	-	-	13.4	-	-	10.6	-	-	7.7	-	-	151
158	25.4	-	-	20.5	-	-	16.5	-	-	13.2	-	-	10.4	-	-	7.7	-	-	158
164	24.9	20.9	-	20.3	-	-	16.3	-	-	13.2	-	-	10.4	-	-	7.7	-	-	164
177	24.0	19.2	-	19.4	16.1	-	15.7	-	-	12.8	-	-	9.9	-	-	7.5	-	-	177
190	23.4	17.2	-	19.2	14.6	-	15.2	12.1	-	12.3	-	-	9.7	-	-	7.5	-	-	190
203	22.7	15.7	-	18.7	13.2	-	14.8	10.8	-	12.1	-	-	9.5	-	-	7.3	-	-	203
217	22.5	14.3	10.6	18.3	11.9	-	14.6	9.7	-	11.9	-	-	9.3	-	-	7.3	-	-	217
230	-	13.0	9.3	18.3	10.8	-	14.1	8.6	-	11.7	-	-	9.3	-	-	7.3	-	-	230
243	-	12.3	8.2	-	9.7	-	13.9	7.7	-	11.7	-	-	9.0	-	-	7.1	-	-	243
256	-	-	7.1	-	8.8	-	13.7	6.8	-	11.5	-	-	8.8	-	-	7.1	-	-	256
269	-	-	6.6	-	8.4	-	-	6.0	-	11.2	-	-	8.8	-	-	6.8	-	-	269
282	-	-	-	-	-	-	-	5.5	-	-	-	-	8.6	-	-	6.8	-	-	282
295	-	-	-	-	-	-	-	-	-	-	-	-	8.6	-	-	6.6	-	-	295
308	-	-	-	-	-	-	-	-	-	-	-	-	-	-	-	6.6	-	-	308
322	-	-	-	-	-	-	-	-	-	-	-	-	-	-	-	-	-	-	322

Remarks

Counterweight 132,300 lb 176,400 lb 220,500 lb 264,600 lb 308,600 lb 352,700 lb 396,800 lb

Max. capacities with minimum counterweight

Further counterweight configurations on request

LIFTING CAPACITIES LUFFING FLY JIB WITH SSL, MAIN BOOM 83°–65°

360° 85 %

169.9 ft + 13.1 ft Main boom + adapter

	Fly jib															
	98.4 ft			118.1 ft			137.8 ft			157.5 ft			177.2 ft			
Radius	83°	73°	65°	83°	73°	65°	83°	73°	65°	83°	73°	65°	83°	73°	65°	Radius
ft	1,000 lb															ft
66	110.5	-	-	-	-	-	-	-	-	-	-	-	-	-	-	66
72	106.5	-	-	92.4	-	-	-	-	-	-	-	-	-	-	-	72
79	102.5	-	-	92.8	-	-	78.3	-	-	-	-	-	-	-	-	79
85	99.2	-	-	86.4	-	-	83.8	-	-	68.6	-	-	-	-	-	85
92	96.1	-	-	83.6	-	-	78.3	-	-	77.4	-	-	70.5	-	-	92
98	93.0	-	-	81.1	-	-	73.0	-	-	73.2	-	-	67.5	-	-	98
105	90.8	-	-	78.7	-	-	69.2	-	-	68.8	-	-	64.4	-	-	105
112	88.8	-	-	76.5	-	-	67.2	-	-	64.4	-	-	61.5	-	-	112
118	86.6	73.2	-	75.0	-	-	65.5	-	-	61.7	-	-	58.4	-	-	118
125	-	69.0	-	73.4	66.1	-	63.5	-	-	58.9	-	-	55.6	-	-	125
131	-	65.5	-	72.1	63.1	-	62.4	-	-	56.9	-	-	53.4	-	-	131
138	-	62.2	-	70.8	59.7	-	61.3	55.6	-	55.6	-	-	50.9	-	-	138
144	-	59.5	-	-	57.1	-	60.2	53.6	-	54.7	49.8	-	48.7	-	-	144
151	-	56.9	48.1	-	54.5	-	59.1	51.6	-	53.8	48.7	-	46.7	42.5	-	151
158	-	-	45.6	-	52.5	-	58.2	49.8	-	52.9	47.6	-	45.9	41.7	-	158
164	-	-	43.4	-	50.5	41.4	-	48.1	-	52.0	46.3	-	45.2	40.8	-	164
177	-	-	-	-	-	37.7	-	44.5	36.4	50.7	43.9	-	43.9	38.8	-	177
190	-	-	-	-	-	35.1	-	40.6	33.1	-	41.2	34.4	42.8	37.3	-	190
203	-	-	-	-	-	-	-	-	30.4	-	38.4	31.3	-	35.7	30.0	203
217	-	-	-	-	-	-	-	-	-	-	-	29.1	-	34.0	27.3	217
230	-	-	-	-	-	-	-	-	-	-	-	26.9	-	31.3	24.9	230
243	-	-	-	-	-	-	-	-	-	-	-	-	-	-	22.7	243
256	-	-	-	-	-	-	-	-	-	-	-	-	-	-	-	256

	196.9 ft			216.5 ft			236.2 ft			255.9 ft			275.6 ft			295.3 ft			
ft	1,000 lb																		ft
92	50.5	-	-	-	-	-	-	-	-	-	-	-	-	-	-	-	-	-	92
98	60.6	-	-	40.8	-	-	-	-	-	-	-	-	-	-	-	-	-	-	98
105	58.9	-	-	50.7	-	-	33.3	-	-	-	-	-	-	-	-	-	-	-	105
112	56.9	-	-	49.4	-	-	42.5	-	-	25.1	-	-	-	-	-	-	-	-	112
118	54.9	-	-	47.8	-	-	41.7	-	-	35.1	-	-	19.8	-	-	-	-	-	118
125	53.1	-	-	46.3	-	-	40.8	-	-	34.6	-	-	28.4	-	-	13.4	-	-	125
131	51.1	-	-	44.8	-	-	39.9	-	-	34.2	-	-	28.2	-	-	22.5	-	-	131
138	49.2	-	-	43.2	-	-	38.8	-	-	33.7	-	-	27.8	-	-	22.3	-	-	138
144	47.2	-	-	41.9	-	-	37.9	-	-	33.1	-	-	27.6	-	-	22.0	-	-	144
151	45.2	-	-	40.3	-	-	37.0	-	-	32.6	-	-	27.3	-	-	21.8	-	-	151
158	43.2	-	-	38.8	-	-	35.7	-	-	32.0	-	-	27.1	-	-	21.6	-	-	158
164	41.4	35.9	-	37.5	-	-	34.6	-	-	31.5	-	-	26.9	-	-	21.4	-	-	164
177	38.8	34.4	-	34.6	29.3	-	32.2	-	-	29.5	-	-	26.0	-	-	20.7	-	-	177
190	36.8	32.8	-	32.6	28.0	-	29.8	24.0	-	27.8	19.4	-	25.1	-	-	20.3	-	-	190
203	35.9	31.7	-	30.6	26.9	-	27.8	22.9	-	26.0	19.0	-	24.0	15.0	-	19.4	-	-	203
217	35.3	30.9	26.5	29.5	25.8	-	26.2	21.8	-	24.5	18.5	-	22.9	14.8	-	18.7	10.4	-	217
230	-	29.8	24.0	29.1	25.1	22.0	24.5	20.9	-	22.9	17.9	-	21.6	14.6	-	18.1	10.4	-	230
243	-	28.0	21.8	-	24.3	19.8	23.8	20.3	17.4	21.6	17.4	-	20.5	14.3	-	17.4	10.4	-	243
256	-	-	20.1	-	23.6	18.1	23.6	19.6	15.9	20.5	16.8	13.0	19.2	14.1	9.7	16.8	10.4	-	256
269	-	-	18.3	-	22.0	16.3	-	19.2	14.1	20.1	16.3	12.6	18.1	13.7	9.7	16.1	10.4	6.0	269
282	-	-	-	-	-	14.8	-	18.3	12.6	-	15.7	12.1	17.6	13.4	9.5	15.4	10.4	6.0	282
295	-	-	-	-	-	-	-	-	11.2	-	15.4	10.8	17.2	13.2	9.3	15.0	10.4	6.0	295
308	-	-	-	-	-	-	-	-	10.1	-	14.8	9.5	-	13.0	9.0	14.8	10.4	6.0	308
322	-	-	-	-	-	-	-	-	-	-	-	8.4	-	13.0	7.9	-	10.4	6.0	322
335	-	-	-	-	-	-	-	-	-	-	-	-	-	-	6.8	-	10.4	6.0	335
348	-	-	-	-	-	-	-	-	-	-	-	-	-	-	6.0	-	9.7	4.9	348
361	-	-	-	-	-	-	-	-	-	-	-	-	-	-	-	-	-	-	361

Remarks

Counterweight 176,400 lb 220,500 lb 264,600 lb 308,600 lb 352,700 lb 396,800 lb

Max. capacities with minimum counterweight

Further counterweight configurations on request

5

TECHNICAL DESCRIPTION

CARRIER

Drive / Steering	16 x 8 x 14.
Frame	Demag-built special main frame of high-strength fine-grain structural steel, with pot-shaped centre section and foldaway outrigger boxes.
Outriggers	4-point outrigger system, folding outrigger beams, fully hydraulic horizontal and vertical extension, providing 360° continuous rotation. Outrigger loading indicator.
Engine	Water-cooled 8-cylinder DaimlerChrysler diesel engine OM 502 LA, output 448 kW (610 hp) at 1800 ^{1}/min, torque 2700 Nm at 1200 ^{1}/min. Fuel tank capacity: 156 gallons.
Transmission	Allison type CLBT 755 with electronic transmission control (ATEC), torque converter and hydraulic retarder.
Axles	1 + 2 + 5 driving, connectable drive of axle 3. 1-4 and 6-8 steering, all axles hydropneumatically suspended and hydraulically blockable.
Wheels and tires	16 wheels, 14.00 R 25.
Steering	Dual-circuit semiblock mechanical steering with hydraulic booster.
Brakes	In conformity with EC directives. Sustained action brake: constant decompression valve, exhaust brake, hydraulic retarder integrated into gearbox.
Electrical equipment	24 V system, lighting in compliance with EC standards.
Driver's cab	Rubber-mounted low-line steel cab, ergonomic design, with pneumatically suspended driver's seat and one passenger's seat; vertically adjustable steering wheel; heated outside mirrors, mirror electrically adjustable; dashboard with clearly arranged instrumentation and carrier controls.

SUPERSTRUCTURE

Engine	Water-cooled 6-cylinder DaimlerChrysler diesel engine OM 906 LA, output: 205 kW (279 hp) at 2300 ^{1}/min, torque 1100 Nm at 1300 ^{1}/min. Fuel tank capacity: 79 gallons.
Hydraulic system	Powered via 5 hydraulic circuits, 4 main pumps for independent control movements, 1 pump for auxiliary circuits, one control pump for the servo control.
Hoist I	Axial-piston variable displacement motor, hoist drum with integrated planetary gear reducer, and brake.
Slew unit	Axial piston motor with planetary gearing, spring-applied automatic holding brake.
Boom elevation	2 differential cylinders with pilot-controlled lowering brake valves.
Control	Electric pilot-control by two self-centering servo levers.
Crane cab	Spacious all-steel comfortable cab (tiltable) with sliding door and large hinged windscreen, roof window with armoured glass, full instrumentation and crane controls, comfortable seat with ergonomic armrest mounted joystick controls, working light. Self-contained hot water heater with timer and 'Heizmatic' for sensitive heat flow control. Intermittent control window wiper and washer, air-conditioning.
Main boom	Boom base and four telescopic sections fabricated from fine grain structural steel, telescoping with partial load. Buckling-resistant Demag ovaloid design with diagonally arranged self-centering slider shoes.
Counterweight	220,500 lb, divisible.
Safety devices	Electronic safe load indicator with large graphic display and sealed touch-type keyboard, digital read-out for hook load, nominal load, boom length, angle, and radius. Analog display to indicate the capacity utilization, and monitoring code to assist in trouble shooting. Integrated control system for boom telescoping, display for load charts and both theoretical and measured outrigger loadings. In addition, provision has been made for: limit switches on hoist and lowering motions, pressure relief and safety holding valves, hoist rotation indicator and anemometer.

OPTIONAL EQUIPMENT

Superlift attachment	This attachment used to increase the crane's load moment consists of both the boom suspension system folding out, as required, at 0°, 30° or 60°. The boom suspension system provides for an automatic rope length adjustment for boom telescoping, and is lowered to the main boom when not needed (axle loads to be observed).
Main boom extension	Lattice extension consisting of components of the 295.3 ft luffing jib, 19.7 – 98.4 ft long, 0°, 20° and 40° offset from 39.3 ft length.
Fixed fly jib	Fixed lattice jib, comprising of parts of the luffing jib, 27.6 – 204.7 ft m long (LF system).
Luffing jib	78.7 – 295.3 ft, plus 13.1 ft adapter, with two luffing masts, pendant bars, electrical equipment, safety devices (hoist II is required when using the luffing jib).
Additional counterweight	176,400 lb, integrated into the standard counterweight, installed by the crane itself.
Additional jack leg	For special duties with 48.2 ft main boom.
Hoist II	Axial piston variable displacement motor, hoist drum with integrated planetary reduction, spring-applied multi-disk brake, hoist rope.
Independent rear axle steering	

NOTES TO LIFTING CAPACITY

Ratings are in compliance with ISO 4305 and DIN 15019.2 (test load = 1.25 x suspended load + 0.1 x dead weight of boom head).
Weight of hook blocks and slings is part of the load, and is to be deducted from the capacity ratings.

Crane operation with main boom is permissible up to a

wind pressure of: 1.25 lb/ft^2
wind speed of: 21.9 mph

Consult operation manual for further details.

Note: Data published herein is intended as a guide only and shall not be construed to warrant applicability for lifting purposes.
Crane operation is subject to the computer charts and operation manual both supplied with the crane.

KEY

Counterweight

Lifting capacities on outriggers 360°

„D“

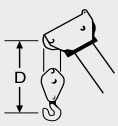

SL Superlift

OVERVIEW OF STANDARD DUTY CHARTS

31.6 ft x 31.5 ft

Main boom

Main boom		0 lb	44,100 lb	88,200 lb	132,300 lb	176,400 lb	220,500 lb	264,600 lb	308,600 lb	352,700 lb	396,800 lb
		360°	360°	360°	360°	360°	360°	360°	360°	360°	360°
48.2 ft		x	x	x	x	x	x	x	x	x	-
63.3 ft		x	x	x	x	x	x	x	x	x	-
78.7 ft		x	x	x	x	x	x	x	x	x	-
93.8 ft		x	x	x	x	x	x	x	x	x	-
108.9 ft		x	x	x	x	x	x/+SSL	x/+SSL	x/+SSL	x/+SSL	+SSL
124.3 ft		x	x	x	x	x	x/+SSL	x/+SSL	x/+SSL	x/+SSL	+SSL
139.4 ft		x	x	x	x	x	x/+SSL	x/+SSL	x/+SSL	x/+SSL	+SSL
154.9 ft		x	x	x	x	x	x/+SSL	x/+SSL	x/+SSL	x/+SSL	+SSL
169.9 ft		x	x	x	x	x	x/+SSL	x/+SSL	x/+SSL	x/+SSL	+SSL
183.7 ft		x	x	x	x	x	x/+SSL	x/+SSL	x/+SSL	x/+SSL	+SSL

26.4 ft x 24.0 ft

Main boom				0 lb	44,100 lb	88,200 lb	132,300 lb	176,400 lb	220,500 lb
				360°	360°	360°	360°	360°	360°
48.2 ft				x	x	x	x	x	x
63.3 ft				x	x	x	x	x	x
78.7 ft				x	x	x	x	x	x
93.8 ft				x	x	x	x	x	x
108.9 ft				x	x	x	x	x	x
124.3 ft				x	x	x	x	x	x
139.4 ft				x	x	x	x	x	x
154.9 ft				-	x	x	x	x	x
169.9 ft				-	x	x	x	x	x
183.7 ft				-	x	x	x	x	x

31.6 ft x 31.5 ft

Main boom extension

Main boom	Extension		88,200 lb	132,300 lb	176,400 lb	220,500 lb	264,600 lb	308,600 lb	352,700 lb	396,800 lb
183.7 ft	19.7 ft – 0°	SSL = 0°	x	x	x	x/+SSL	x/+SSL	x/+SSL	+SSL	+SSL
	39.4 ft – 0°	SSL = 0°	x	x	x	x/+SSL	x/+SSL	x/+SSL	+SSL	+SSL
	59.1 ft – 0°	SSL = 0°	x	x	x	x/+SSL	x/+SSL	x/+SSL	+SSL	+SSL
	78.7 ft – 0°	SSL = 0°	x	x	x	x/+SSL	x/+SSL	x/+SSL	+SSL	+SSL
	98.4 ft – 0°	SSL = 0°	x	x	x	x/+SSL	x/+SSL	x/+SSL	+SSL	+SSL
	39.4 ft – 0°	SSL = 30°	x	x	x/+SSL	x/+SSL	x/+SSL	x/+SSL	+SSL	+SSL
	59.1 ft – 0°	SSL = 30°	x	x	x/+SSL	x/+SSL	x/+SSL	x/+SSL	+SSL	+SSL
	78.7 ft – 0°	SSL = 30°	x	x	x/+SSL	x/+SSL	x/+SSL	x/+SSL	+SSL	+SSL
	98.4 ft – 0°	SSL = 30°	x	x	x/+SSL	x/+SSL	x/+SSL	x/+SSL	+SSL	+SSL
	39.4 ft – 20°	SSL = 0°	x	x	x	x/+SSL	x/+SSL	x/+SSL	+SSL	+SSL
	59.1 ft – 20°	SSL = 0°	x	x	x	x/+SSL	x/+SSL	x/+SSL	+SSL	+SSL
	78.7 ft – 20°	SSL = 0°	x	x	x	x/+SSL	x/+SSL	x/+SSL	+SSL	+SSL
	98.4 ft – 20°	SSL = 0°	x	x	x	x/+SSL	x/+SSL	x/+SSL	+SSL	+SSL
	39.4 ft – 40°	SSL = 0°	x	x	x	x/+SSL	x/+SSL	+SSL	+SSL	-
	59.1 ft – 40°	SSL = 0°	x	x	x	x/+SSL	x/+SSL	+SSL	+SSL	-
	78.7 ft – 40°	SSL = 0°	x	x	x	x/+SSL	x/+SSL	+SSL	+SSL	-
	98.4 ft – 40°	SSL = 0°	x	x	x	x/+SSL	x/+SSL	+SSL	+SSL	-

26.4 ft x 24.0 ft

Main boom	Extension					88,200 lb	132,300 lb	176,400 lb	220,500 lb
183.7 ft	19.7 ft – 0°					x	x	x	x
	39.4 ft – 0°					x	x	x	x
	59.1 ft – 0°					x	x	x	x
	78.7 ft – 0°					x	x	x	x
	98.4 ft – 0°					x	x	x	x
	39.4 ft – 20°					x	x	x	x
	59.1 ft – 20°					x	x	x	x
	78.7 ft – 20°					x	x	x	x
	98.4 ft – 20°					x	x	x	x
	39.4 ft – 40°					x	x	x	x
	59.1 ft – 40°					x	x	x	x
	78.7 ft – 40°					x	x	x	x
	98.4 ft – 40°					x	x	x	x

31.6 ft x 31.5 ft

Fixed fly jib

Main boom	Extension		88,200 lb	132,300 lb	176,400 lb	220,500 lb	264,600 lb	308,600 lb	352,700 lb	396,800 lb
139.4 ft	27.6 ft – 0°		x	x	x	x	x	x	x	-
	47.2 ft – 0°		x	x	x	x	x	x	x	-
	66.9 ft – 0°		x	x	x	x	x	x	x	-
	86.6 ft – 0°		x	x	x	x	x	x	x	-
	106.3 ft – 0°		x	x	x	x	x	x	x	-
	126.0 ft – 0°		x	x	x	x	x	x	x	-
	145.7 ft – 0°		x	x	x	x	x	x	x	-
	165.4 ft – 0°		x	x	x	x	x	x	x	-
	185.0 ft – 0°		x	x	x	x	x	x	x	-
	204.7 ft – 0°		x	x	x	x	x	x	x	-
	86.6 ft – 20°		x	x	x	x	x	x	-	-
	106.3 ft – 20°		x	x	x	x	x	x	-	-
	126.0 ft – 20°		x	x	x	x	x	x	-	-
	145.7 ft – 20°		x	x	x	x	x	x	-	-
	165.4 ft – 20°		x	x	x	x	x	x	-	-
	185.0 ft – 20°		x	x	x	x	x	x	-	-
	204.7 ft – 20°		x	x	x	x	x	x	-	-
	86.6 ft – 40°		x	x	x	x	x	-	-	-
	106.3 ft – 40°		x	x	x	x	x	-	-	-
	126.0 ft – 40°		x	x	x	x	x	-	-	-
	145.7 ft – 40°		x	x	x	x	x	-	-	-
	165.4 ft – 40°		x	x	x	x	x	-	-	-
	185.0 ft – 40°		x	x	x	x	x	-	-	-
	204.7 ft – 40°		x	x	x	x	x	-	-	-

Main boom	Extension	88,200 lb	132,300 lb	176,400 lb**	220,500 lb	264,600 lb	308,600 lb	352,700 lb	396,800 lb
169.9 ft		SSL 0° + 30°							
	27.6 ft – 0°	x	x	x/+SSL	x/+SSL	x/+SSL	x/+SSL	x/+SSL	+SSL+
	47.2 ft – 0°	x	x	x/+SSL	x/+SSL	x/+SSL	x/+SSL	x/+SSL	SSL
	66.9 ft – 0°	x	x	x/+SSL	x/+SSL	x/+SSL	x/+SSL	x/+SSL	+SSL
	86.6 ft – 0°	x	x	x/+SSL	x/+SSL	x/+SSL	x/+SSL	x/+SSL	+SSL
	106.3 ft – 0°	x	x	x/+SSL	x/+SSL	x/+SSL	x/+SSL	x/+SSL	+SSL
	126.0 ft – 0°	x	x	x/+SSL	x/+SSL	x/+SSL	x/+SSL	x/+SSL	+SSL
	145.7 ft – 0°	x	x	x/+SSL	x/+SSL	x/+SSL	x/+SSL	x/+SSL	+SSL
	165.4 ft – 0°	x	x	x/+SSL	x/+SSL	x/+SSL	x/+SSL	x/+SSL	+SSL
		SSL 0°							
	86.6 ft – 20°	x	x	x	x/+SSL	x/+SSL	x/+SSL	+SSL	-
	106.3 ft – 20°	x	x	x	x/+SSL	x/+SSL	x/+SSL	+SSL	-
	126.0 ft – 20°	x	x	x	x/+SSL	x/+SSL	x/+SSL	+SSL	-
	145.7 ft – 20°	x	x	x	x/+SSL	x/+SSL	x/+SSL	+SSL	-
	165.4 ft – 20°	x	x	x	x/+SSL	x/+SSL	x/+SSL	+SSL	-
		SSL 0°							
	86.6 ft – 40°	x	x	x	x/+SSL	x/+SSL	+SSL	-	-
	106.3 ft – 40°	x	x	x	x/+SSL	x/+SSL	+SSL	-	-
	126.0 ft – 40°	x	x	x	x/+SSL	x/+SSL	+SSL	-	-
	145.7 ft – 40°	x	x	x	x/+SSL	x/+SSL	+SSL	-	-
	165.4 ft – 40°	x	x	x	x/+SSL	x/+SSL	+SSL	-	-

** 176,400 lb:
only SSL 30°

OVERVIEW OF STANDARD DUTY CHARTS

31.6 ft x 31.5 ft

Luffing fly jib

Main boom	Jib	88,200 lb	132,300 lb	176,400 lb	220,500 lb	264,600 lb	308,600 lb	352,700 lb	396,800 lb
		83° / 73° / 65°							
48.2 ft + 13.1 ft 63.3 ft + 13.1 ft 78.7 ft + 13.1 ft 93.8 ft + 13.1 ft 108.9 ft + 13.1 ft	78.7 ft	-	x/-/-	x/-/-	x/x/x	x/x/x	x/x/x	x/x/x	x/x/x
	98.4 ft	-	x/-/-	x/-/-	x/x/x	x/x/x	x/x/x	x/x/x	x/x/x
	118.1 ft	-	x/-/-	x/-/-	x/x/x	x/x/x	x/x/x	x/x/x	x/x/x
	137.8 ft	-	x/-/-	x/-/-	x/x/x	x/x/x	x/x/x	x/x/x	x/x/x
	157.5 ft	-	x/-/-	x/-/-	x/x/x	x/x/x	x/x/x	x/x/x	x/x/x
	177.2 ft	-	x/-/-	x/-/-	x/x/x	x/x/x	x/x/x	x/x/x	x/x/x
	196.9 ft	-	x/-/-	x/-/-	x/x/x	x/x/x	x/x/x	x/x/x	x/x/x
	216.5 ft	-	x/-/-	x/-/-	x/x/x	x/x/x	x/x/x	x/x/x	x/x/x
	236.2 ft	-	-	x/-/-	x/x/x	x/x/x	x/x/x	x/x/x	x/x/x
	255.9 ft	-	-	x/-/-	x/x/x	x/x/x	x/x/x	x/x/x	x/x/x
	275.6 ft	-	-	-	x/x/x	x/x/x	x/x/x	x/x/x	x/x/x
	295.3 ft	-	-	-	x/x/x	x/x/x	x/x/x	x/x/x	x/x/x

Main boom	Jib	88,200 lb	132,300 lb	176,400 lb	220,500 lb	264,600 lb	308,600 lb	352,700 lb	396,800 lb
		83° / 73° / 65°							
154.9 ft + 13.1 ft	78.7 ft	-	x/-/-	x/-/-	x/x/-	x/x/-	x/x/-	-	-
	98.4 ft	-	x/-/-	x/-/-	x/x/x	x/x/x	x/x/x	-	-
	118.1 ft	-	x/-/-	x/-/-	x/x/x	x/x/x	x/x/x	-	-
	137.8 ft	-	x/-/-	x/-/-	x/x/x	x/x/x	x/x/x	-	-
	157.5 ft	-	x/-/-	x/-/-	x/x/x	x/x/x	x/x/x	-	-
	177.2 ft	-	x/-/-	x/-/-	x/x/x	x/x/x	x/x/x	-	-
	196.9 ft	-	x/-/-	x/-/-	x/x/x	x/x/x	x/x/x	-	-
	216.5 ft	-	x/-/-	x/-/-	x/x/-	x/x/-	x/x/-	-	-
	236.2 ft	-	-	x/-/-	x/x/-	x/x/-	x/x/-	-	-
	255.9 ft	-	-	x/-/-	x/-/-	x/-/-	x/-/-	-	-
	275.6 ft	-	-	-	x/-/-	x/-/-	x/-/-	-	-
	295.3 ft	-	-	-	x/-/-	x/-/-	x/-/-	-	-

Main boom	Jib	88,200 lb	132,300 lb	176,400 lb	220,500 lb	264,600 lb	308,600 lb	352,700 lb	396,800 lb
		83° / 73° / 65°							
124.3 ft + 13.1 ft	78.7 ft	-	x/-/-	x/-/-	x/x/x	x/x/x	x/x/x	x/x/x	x/x/x
	98.4 ft	-	x/-/-	x/-/-	x/x/x	x/x/x	x/x/x	x/x/x	x/x/x
	118.1 ft	-	x/-/-	x/-/-	x/x/x	x/x/x	x/x/x	x/x/x	x/x/x
	137.8 ft	-	x/-/-	x/-/-	x/x/x	x/x/x	x/x/x	x/x/x	x/x/x
	157.5 ft	-	x/-/-	x/-/-	x/x/x	x/x/x	x/x/x	x/x/x	x/x/x
	177.2 ft	-	x/-/-	x/-/-	x/x/x	x/x/x	x/x/x	x/x/x	x/x/x
	196.9 ft	-	x/-/-	x/-/-	x/x/x	x/x/x	x/x/x	x/x/x	x/x/x
	216.5 ft	-	x/-/-	x/-/-	x/x/x	x/x/x	x/x/x	x/x/x	x/x/x
	236.2 ft	-	-	x/-/-	x/x/x	x/x/x	x/x/x	x/x/x	x/x/x
	255.9 ft	-	-	x/-/-	x/x/x	x/x/x	x/x/x	x/x/x	x/x/x
	275.6 ft	-	-	-	x/x/x	x/x/x	x/x/x	x/x/x	x/x/x
	295.3 ft	-	-	-	x/x/-	x/x/-	x/x/-	x/x/-	x/x/-

Main boom	Jib	88,200 lb	132,300 lb	176,400 lb	220,500 lb	264,600 lb	308,600 lb	352,700 lb	396,800 lb
		83° / 73° / 65°							
169.9 ft + 13.1 ft	78.7 ft	-	x/-/-	x/-/-	x/x/-	x/x/-	-	-	-
	98.4 ft	-	x/-/-	x/-/-	x/x/x	x/x/x	-	-	-
	118.1 ft	-	x/-/-	x/-/-	x/x/x	x/x/x	-	-	-
	137.8 ft	-	x/-/-	x/-/-	x/x/x	x/x/x	-	-	-
	157.5 ft	-	x/-/-	x/-/-	x/x/x	x/x/x	-	-	-
	177.2 ft	-	x/-/-	x/-/-	x/x/x	x/x/x	-	-	-
	196.9 ft	-	x/-/-	x/-/-	x/x/x	x/x/x	-	-	-
	216.5 ft	-	x/-/-	x/-/-	x/x/-	x/x/-	-	-	-
	236.2 ft	-	-	x/-/-	x/x/-	x/x/-	-	-	-
	255.9 ft	-	-	x/-/-	x/-/-	x/-/-	-	-	-
	275.6 ft	-	-	-	x/-/-	x/-/-	-	-	-
	295.3 ft	-	-	-	x/-/-	x/-/-	-	-	-

Main boom	Jib	88,200 lb	132,300 lb	176,400 lb	220,500 lb	264,600 lb	308,600 lb	352,700 lb	396,800 lb
		83° / 73° / 65°							
139.4 ft + 13.1 ft	78.7 ft	-	x/-/-	x/-/-	x/x/x	x/x/x	x/x/x	x/x/x	-
	98.4 ft	-	x/-/-	x/-/-	x/x/x	x/x/x	x/x/x	x/x/x	-
	118.1 ft	-	x/-/-	x/-/-	x/x/x	x/x/x	x/x/x	x/x/x	-
	137.8 ft	-	x/-/-	x/-/-	x/x/x	x/x/x	x/x/x	x/x/x	-
	157.5 ft	-	x/-/-	x/-/-	x/x/x	x/x/x	x/x/x	x/x/x	-
	177.2 ft	-	x/-/-	x/-/-	x/x/x	x/x/x	x/x/x	x/x/x	-
	196.9 ft	-	x/-/-	x/-/-	x/x/x	x/x/x	x/x/x	x/x/x	-
	216.5 ft	-	x/-/-	x/-/-	x/x/x	x/x/x	x/x/x	x/x/x	-
	236.2 ft	-	-	x/-/-	x/x/x	x/x/x	x/x/x	x/x/x	-
	255.9 ft	-	-	x/-/-	x/x/x	x/x/x	x/x/x	x/x/x	-
	275.6 ft	-	-	-	x/x/x	x/x/x	x/x/x	x/x/x	-
	295.3 ft	-	-	-	x/x/-	x/x/-	x/x/-	x/x/-	-

with SSL 0°

Jib	Main boom 108.9 ft + 13.1 ft				Main boom 139.4 ft + 13.1 ft			
	264,600 lb	308,600 lb	352,700 lb	396,800 lb	264,600 lb	308,600 lb	352,700 lb	396,800 lb
	83° / 73° / 65°							
98.4 ft	x/x/x	x/x/x	x/x/x	x/x/x	x/x/x	x/x/x	x/x/x	x/x/x
118.1 ft	x/x/x	x/x/x	x/x/x	x/x/x	x/x/x	x/x/x	x/x/x	x/x/x
137.8 ft	x/x/x	x/x/x	x/x/x	x/x/x	x/x/x	x/x/x	x/x/x	x/x/x
157.5 ft	x/x/x	x/x/x	x/x/x	x/x/x	x/x/x	x/x/x	x/x/x	x/x/x
177.2 ft	x/x/x	x/x/x	x/x/x	x/x/x	x/x/x	x/x/x	x/x/x	x/x/x
196.9 ft	x/x/x	x/x/x	x/x/x	x/x/x	x/x/x	x/x/x	x/x/x	x/x/x
216.5 ft	x/x/x	x/x/x	x/x/x	x/x/x	x/x/x	x/x/x	x/x/x	x/x/x
236.2 ft	x/x/x	x/x/x	x/x/x	x/x/x	x/x/-	x/x/x	x/x/x	x/x/x
255.9 ft	x/x/-	x/x/x	x/x/x	x/x/x	x/x/-	x/x/-	x/x/x	x/x/x
275.6 ft	x/x/-	x/x/x	x/x/x	x/x/x	x/x/-	x/x/-	x/x/x	x/x/x
295.3 ft	x/x/-	x*/x/-	x/x/x	x/x/x	x/x/-	x/x/-	x/x/x	x/x/x

Jib	Main boom 154.9 ft + 13.1 ft				Main boom 169.9 ft + 13.1 ft			
	264,600 lb	308,600 lb	352,700 lb	396,800 lb	264,600 lb	308,600 lb	352,700 lb	396,800 lb
	83° / 73° / 65°							
98.4 ft	x/x/x	x/x/x	x/x/x	x/x/x	x/x/x	x/x/x	x/x/x	x/x/x
118.1 ft	x/x/x	x/x/x	x/x/x	x/x/x	x/x/x	x/x/x	x/x/x	x/x/x
137.8 ft	x/x/x	x/x/x	x/x/x	x/x/x	x/x/x	x/x/x	x/x/x	x/x/x
157.5 ft	x/x/x	x/x/x	x/x/x	x/x/x	x/x/x	x/x/x	x/x/x	x/x/x
177.2 ft	x/x/x	x/x/x	x/x/x	x/x/x	x/x/x	x/x/x	x/x/x	x/x/x
196.9 ft	x/x/x	x/x/x	x/x/x	x/x/x	x/x/x	x/x/x	x/x/x	x/x/x
216.5 ft	x/x/-	x/x/x	x/x/x	x/x/x	x/x/-	x/x/x	x/x/x	x/x/x
236.2 ft	x/x/-	x/x/x	x/x/x	x/x/x	x/x/-	x/x/-	x/x/x	x/x/x
255.9 ft	x/x/-	x/x/-	x/x/x	x/x/x	x/x/-	x/x/-	x/x/x	x/x/x
275.6 ft	x/x/-	x/x/-	x/x/x	x/x/x	x/x/-	x/x/-	x/x/x	x/x/x
295.3 ft	-	-	-	-	-	-	-	-

with SSL 60°

Main boom	Jib	88,200 lb	132,300 lb	176,400 lb	220,500 lb	264,600 lb	308,600 lb	352,700 lb	396,800 lb
		83°							
108.9 ft + 13.1 ft 124.3 ft + 13.1 ft 139.4 ft + 13.1 ft 154.9 ft + 13.1 ft 169.9 ft + 13.1 ft	98.4 ft	-	-	x	x	x	x	x	x
	118.1 ft	-	-	x	x	x	x	x	x
	137.8 ft	-	-	x	x	x	x	x	x
	157.5 ft	-	-	x	x	x	x	x	x
	177.2 ft	-	-	x	x	x	x	x	x
	196.9 ft	-	-	x	x	x	x	x	x
	216.5 ft	-	-	x	x	x	x	x	x
	236.2 ft	-	-	x	x	x	x	x	x
	255.9 ft	-	-	x	x	x	x	x	x
	275.6 ft	-	-	-	x	x	x	x	x
	295.3 ft	-	-	-	x	x	x	x	x

26.4 ft x 24.0 ft

Main boom	Jib	88,200 lb	132,300 lb	176,400 lb	220,500 lb	264,600 lb	308,600 lb	352,700 lb	396,800 lb
48.2 ft + 13.1 ft 63.3 ft + 13.1 ft 78.7 ft + 13.1 ft 93.8 ft + 13.1 ft 108.9 ft + 13.1 ft 124.3 ft + 13.1 ft 139.4 ft + 13.1 ft 154.9 ft + 13.1 ft 169.9 ft + 13.1 ft	78.7 ft	-	x	x	x	-	-	-	-
	98.4 ft	-	x	x	x	-	-	-	-
	118.1 ft	-	x	x	x	-	-	-	-
	137.8 ft	-	x	x	x	-	-	-	-
	157.5 ft	-	x	x	x	-	-	-	-
	177.2 ft	-	x	x	x	-	-	-	-
	196.9 ft	-	x	x	x	-	-	-	-
	216.5 ft	-	-	x	x	-	-	-	-
	236.2 ft	-	-	-	x	-	-	-	-
	255.9 ft	-	-	-	x	-	-	-	-

NOTES

NOTES

The information contained in this brochure merely consists of general descriptions and a broad compilation of performance features which might not apply precisely as described under specific application conditions or which may change as a result of further product development.
The desired performance features only become binding once expressly agreed in the final contract.

Note: Data published herein is intended as a guide only and shall not be construed to warrant applicability for lifting purposes.
Crane operation is subject to the computer charts and operation manual both supplied with the crane.

Subject to change without notice.

08 / 05

TEREX | DEMAG

Terex Cranes Wilmington Operations
Mobile hydraulic and lattice-boom cranes
202 Raleigh St. · Wilmington, NC 28412 USA
Phone +1 910 395 8500 · Fax +1 910 395 8538
Email: american@american-crane.com

Order Nr. AC 500-2 usa A1 – 201 116 12